SHARP SERVICE MANUAL

CODE: 00ZSF1014SM1E

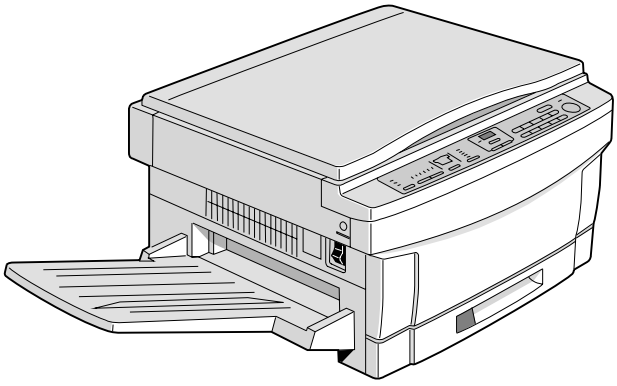

Copier

MODEL SF-1014

CONTENTS

[1] GENERAL DESCRIPTION 1-1

[2] PRODUCT SPECIFICATIONS 2-1

[3] EXTERNAL VIEW AND INTERNAL STRUCTURE 3-1

[4] UNPACKING AND INSTALLATION 4-1

[5] GENERAL DESCRIPTIONS OF EACH SECTION 5-1

[6] DISASSEMBLY AND ASSEMBLY 6-1

[7] ADJUSTMENTS 7-1

[8] SIMULATIONS 8-1

[9] SELF DIAGNOSTICS 9-1

[10] SERVICE AT MEMORY TROUBLE AND
MAIN CONTROL PWB REPLACEMENT 10-1

[11] MAINTENANCE 11-1

[12] ELECTRICAL SECTION 12-1

Parts marked with "⚠" is important for maintaining the safety of the set. Be sure to replace these parts with specified ones for maintaining the safety and performance of the set.

SHARP CORPORATION

This document has been published to be used for after sales service only.
The contents are subject to change without notice.

CONTENTS

[1] GENERAL DESCRIPTION 1-1
1. Features 1-1
2. Target users 1-1
3. System outline 1-1

[2] PRODUCT SPECIFICATIONS 2-1
1. Basic specifications 2-1
2. Details of each section 2-1
3. Supplies 2-3

[3] EXTERNAL VIEW AND INTERNAL STRUCTURE 3-1
1. External view and internal structure 3-1
2. Operation panel 3-2
3. Cross section 3-3
4. Switches, sensors, detectors 3-4
5. Clutches, solenoids 3-5
6. Motors 3-6
7. PWBs 3-7

[4] UNPACKING AND INSTALLATION 4-1
1. Packing drawing 4-1
2. Installation 4-1
(1) Environment 4-1
(2) Space around the machine 4-2
(3) Installing table 4-2
(4) Power source 4-2
(5) Grounding 4-2
3. Installation procedure 4-3
(1) Optical system unlocking 4-3
(2) Cassette setting 4-3
(3) Developer setting 4-4
(4) Toner supply 4-5
(5) Toner density sensor level check 4-5
(6) Accessory attachment 4-5
4. Locking procedure for transit or repacking 4-6
(1) No.2/No.3 mirror unit (Mirror base B) lock 4-6
(2) No.4/no.5 mirror unit (Mirror base C) lock 4-6
5. Optional multi bypass feeder unit Installation Manual . . 4-6
(1) Open the upper unit of the main copier unit. 4-6
(2) Release the lock for the manual bypass unit and remove the manual bypass unit. 4-6
(3) Mount the multi bypass feeder unit onto the main copier unit. 4-7

[5] GENERAL DESCRIPTIONS OF EACH SECTION 5-1
1. Paper feed section 5-1
2. Separation, transport section 5-2
3. Fuser, paper exit section 5-2
4. Developer section 5-2
4-1. General descriptions 5-2
(1) Two-component developer 5-2
(2) Two-component magnetic brush development 5-2
(3) Developing bias 5-2
5. Optical system 5-3
5-1. General descriptions 5-3
(1) Original table 5-3
(2) Copy lamp 5-3
(3) Mirror 5-3
(4) Lens (Fixed focus lens) 5-3
(5) Lens home position sensor (LHPS) 5-3
(6) Lens base 5-3
(7) Lens drive shaft 5-4
(8) Lens drive wire 5-4
(9) No. 4/5 mirror base 5-4
(10) Mirror motor 5-4
(11) Mirror home position sensor (MHPS) 5-4
(12) No. 2/3 mirror base 5-4
(13) Copy lamp unit 5-4
(14) Thermal fuse 5-4
(15) Reflector 5-4
(16) Exposure adjustment plates 5-4
(17) Mirror base drive wire 5-4
(18) Lens drive motor 5-4
(19) AE sensor 5-4
5-2. Basic operations 5-4
6. Copy process 5-6
(1) Photoconductor 5-6
(2) Process diagram 5-6
(3) Actual process 5-7
(4) Transit of photoconductor drum surface potential 5-11
(5) Process correction system 5-12
1) Outline of the correction system 5-12
2) Correction operation 5-12

[6] DISASSEMBLY AND ASSEMBLY 6-1
1. Paper feed section, paper transport section, power section 6-1
1-1. Paper feed unit 6-1
1-2. Paper feed roller ass'y removal 6-1
1-3. Separation roller 6-2
1-4. Takeup roller, paper feed roller 6-2
1-5. Resist roller 6-3
1-6. Transport belt 6-4
1-7. Socket holder unit 6-4
1-8. Lower unit PWB 6-4
1-9. Cassette paper empty detector (CPED1) 6-4
1-10. Power unit 6-4
2. Manual paper feed section 6-5
2-1. Manual paper feed roller, manual takeup roller . . . 6-5
2-2. Reverse rotation roller ass'y 6-5
3. Fuser section 6-6
3-1. Fuser unit removal 6-6
3-2. Heater lamp replacement 6-6
3-3. Upper heat roller ass'y removal 6-7
3-4. Upper separation pawl replacement 6-7
3-5. Lower cleaning roller and lower heat roller replacement 6-7
3-6. Scraper replacement 6-8
3-7. Thermistor/thermostat removal 6-8
4. Optical system 6-9
4-1. Copy lamp replacement 6-9
4-2. Copy lamp unit replacement 6-9
4-3. Mirror base drive wire replacement 6-9
4-4. Lens and lens drive wire replacement 6-10
4-5. No. 4/5 mirror unit and peripheral parts replacement 6-11

4-6. Optical unit removal 6-11
4-7. Other parts in the optical system 6-11
4-8. Light adjustment plate/temperature fuse removal 6-12
5. Drum section 6-13
5-1. Drum unit removal 6-13
6. Developer section 6-13
6-1. Developer unit removal 6-13
6-2. Developer cartridge removal 6-13
6-3. Toner motor removal 6-13
6-4. Toner density sensor 6-14
7. Operation panel section/medium cabinet 6-14
8. Major parts in the frame side 6-14
8-1. Ozone filter 6-14
8-2. Optical unit cooling fan removal 6-14
8-3. Ventilation fan motor 6-15
8-4. Transport roller clutch 6-15
8-5. Paper exit sensor 6-15

[7] ADJUSTMENTS 7-1
1. Developer section 7-1
(1) MG roller main pole position adjustment 7-1
(2) Adjustment of clearance between DV doctor and MG roller 7-2
2. Optical section 7-3
A. Adjustments list 7-3
B. Notes 7-3
C. Adjustment contents 7-6
(1) Lens 7-6
(2) Mirror 7-7
(3) Image distortion adjustment 7-8
(4) Copy image center position adjustment 7-12
(5) Focus adjustment (Resolution adjustment) . . . 7-14
(6) Copy magnification ratio adjustment 7-15
(7) Uniformity adjustment 7-18
(8) Image loss/void area adjustment 7-18
3. COPY DENSITY ADJUSTMENT 7-23
(1) Copy density adjustment timing 7-23
(2) Note for copy density adjustment 7-23
(3) Necessary items for the copy density adjustment 7-23
(4) Copy density adjustment mode 7-23
(5) Copy density adjustment procedure 7-23
A. Test chart (UK0G-0162FCZZ) setting 7-23
B. Normal copy mode (Non-toner-save mode) copy density adjustment 7-23
C. Normal copy mode (Toner save mode) copy density adjustment 7-24
D. Photo copy mode (Non-toner-save mode) copy density adjustment 7-24
E. Auto copy mode (Non-toner-save mode) copy density adjustment 7-24
F. Auto copy mode (Toner save mode) copy density adjustment 7-25
(6) Copy density adjustment table 7-26
4. Others 7-27
(1) Transfer charger wire installation 7-27
(2) How to adjust the separation corona valtage . . . 7-27
(3) How to adjust the developing bias voltage 7-27

[8] SIMULATIONS 8-1
1. Outline 8-1
2. Purpose 8-1
3. Operating procedure 8-1
4. Purpose list 8-2
5. Details of simulations 8-3
6. User simulations 8-12

[9] SELF DIAG 9-1
1. Summary/purpose 9-1
2. Operation 9-1
3. Clearing the self diag display 9-1
4. Self diag contents 9-2
5. Conditions for the JAM display 9-7

[10] SERVICING AT MEMORY TROUBLE AND MAIN CONTROL PWB REPLACEMENT 10-1
1. General 10-1
2. Purpose 10-1
3. Remedies 10-1
4. Set value recording sheet 10-4
5. Memory simulation list 10-5

[11] MAINTENANCE 11-1

[12] ELECTRICAL SECTION 12-1
1. System block diagram 12-1
2. System operation at power ON 12-1
3. Main circuit 12-2
(1) Block diagram 12-2
(2) CPU (IC110) M37702 12-2
① Outline 12-2
② Pin arrangement 12-2
③ Block diagram 12-3
④ CPU: M37702 (IC110) pin signals 12-4
(3) Start/stop control circuit 12-5
(4) Heater lamp control circuit 12-6
① General 12-6
(5) Driver circuit (Solenoid, magnetic clutch) 12-7
① General 12-7
② Operation 12-7
(6) Stepping motor drive circuit 12-7
① General 12-7
(7) AE (Auto Exposure) sensor circuit 12-7
(8) Toner supply motor drive circuit 12-8
(9) Reset IC (IC113) 12-8
① Outline 12-8
② Operation 12-8
(10) Copy lamp control section 12-9
4. Operating section 12-11
(1) Outline 12-11
(2) Display circuit 12-12
① Block diagram 12-12
② Operation 12-12
(3) LED display 12-13
5. Power section 12-13
(1) Signal name and output voltage 12-13

[1] GENERAL DESCRIPTION

1. Features

[Small]

- Compact design
- Small area for operation

[Speedy]

- Warm-up time 30 sec or less, the first copy 5.9 sec ~ the fastest in the class.

[Soft]

- The energy save mode reduces the total power consumption.
- Ozone generation is limited.
- Use of materials which can be recycled.

User simulation

The user can select the desired operating conditions easily. Auto clear time, power save mode time, power save mode warm up time can be set by the user simulation.

2. Target users

Average copy volume of 2,000 ~ 3,000 sheets/month (max. 15,000 sheets/month)

3. System outline

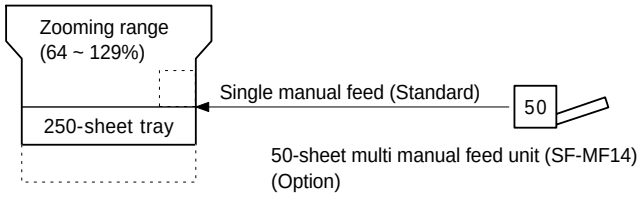

[2] PRODUCT SPECIFICATIONS

1. Basic specifications

(1) Type: Table top

(2) Copy speed

Paper size	Normal	Enlargement	Reduction
B4	11 sheets/min	10 sheets/min	12 sheets/min
A4 (Landscape)	14 sheets/min	10 sheets/min	12 sheets/min
B5 (Landscape)	14 sheets/min	10 sheets/min	12 sheets/min
10″ × 14″	11 sheets/min	10 sheets/min	12 sheets/min
Legal	11 sheets/min	10 sheets/min	12 sheets/min
Letter (Landscape)	14 sheets/min	10 sheets/min	12 sheets/min

Note: Copy speeds in the enlargement/reduction copy are the same in all the rates.

(3) Warm-up time

Normal	30 sec or less (20 °C, 65%RH, rated voltage)
(Preheat YES/NO)	10sec or less (Preheat mode) Max. 30sec (auto power shut off mode)
Jam recovery time	8sec (Conditions: Standard condition after 60sec of leaving after opening the door.)

(4) First copy time

First copy time from each paper feed port	Tray: 5.9sec Manual: 5.9sec

(5) Jam recovery time: 5 sec (Condition: Jam in a section except for the fuser section, within 6.0 sec from door open, standard condition.)

(6) Multi copy

Max. quantity of multi copy	99 sheets

(7) Original

Max. original size	B4/10″ × 14″
Original reference position	Left side, about 12mm from the rear
Detection	NO
Detection size	AB series
	Inch series

(8) Copy magnification ratio

Fixed ratio	AB series	3R+3E/129, 122, 115, 81, 70, 64%
	Inch series	2R+2E/129, 117, 78, 64%
Zoom width		64 ~ 129%

(9) Exposure

Exposure mode	Auto/Manual/Photo
Manual steps	9 steps

(10) Void width

	Normal	Reduction	Enlargement
Void area	Lead edge 3.0mm or less	Lead edge 3.0mm or less	Lead edge 3.0mm or less
	Side (front) 3.0mm or less	Side (front) 3.0mm or less	Side (front) 3.0mm or less
	Rear edge 1mm ~ 3.0mm	Rear edge 1mm ~ 3.0mm	Rear edge 1mm ~ 3.0mm
Image loss	Lead edge 3.0mm max.	Lead edge 5.0mm max.	Lead edge 2.5mm max.
	Side (front) 3.0mm max.	Side (front) 5.0mm max.	Side (front) 2.5mm max.
	Rear edge 4.0mm max.	Rear edge 6.0mm max.	Rear edge 3.0mm max.

(11) Paper exit

Paper exit tray capacity	100 sheets

(12) External view

W × D × H (mm) OC top		500 × 492 × 288
Occupying area	W (mm)	500 + 257 (paper exit tray) + 205 (option Multi paper feed unit)
	D (mm)	492
Weight		About 27.4 kg

(13) Power source

Voltage	100V, 110V, 120V, 127V, 220V, 220 ~ 230V, 230 ~ 240V, 240V
Frequency	50/60Hz common

(14) Power consumption

Max. power consumption	1.4 kW
Average power consumption when operating (Ref. value)	582.4 Wh
Power consumption in standby (Ref. value)	72.5 Wh
Power consumption in pre-heating (Ref. value)	47.7 Wh
Power consumption in auto power shut off (Ref. value)	14.8 Wh
Auto OFF mode (Ref. value) Dry heater connected Dry heater not connected	 9.5 Wh 0 Wh
Energy consumption efficiency	49.4 Wh

Note: Max. value when an option is installed.

2. Details of each section

(1) Paper feed

Copying size (Max. ~ Min.)	AB series	B4 ~ A6 (Postcard)
	Inch series	10 × 14 ~ 5 1/2 × 8 1/2
Paper feed system		1 tray + single manual feed
Paper feed capacity		250 sheets × 1

- AB series

Each paper feed port	Paper feed size	Paper weight	Special paper	Paper feed position
Tray	B4 ~ A5 (Landscape)	56 ~ 80g/m^2	Recommended recycle paper	Front
Single manual feed	B4 ~ A6 postcard (Portrait) ✳For paper of 104 ~ 130g/m^2, A4 or smaller.	52 ~ 130g/m^2	No. 2 original, OPH, label, recommended recycle paper, postcards	Side
Multi manual feed (OP)				
• When in multi paper feed	B4 ~ A5 (Landscape)	56 ~ 80g/m^2	Recommended recycle paper	Side
• When in single paper feed	B4 ~ A6 ✳For paper of 104 ~ 130g/m^2, A4 or smaller.	52 ~ 130g/m^2	Recommended recycle paper, No. 2 original, OPH label	Side

- Inch series

Each paper feed port	Paper feed size	Paper weight	Special paper	Paper feed position
Tray	10 × 14 ~ 5 1/2 × 8 1/2	15 ~ 21 lbs.	Recommended recycle paper	Front
Single manual feed	10 × 14 ~ 5 1/2 × 8 1/2 ✳For paper of 28 ~ 34.5lbs, letter size or smaller.	14 ~ 34.5 lbs.	No. 2 original, OHP. recommended recycle paper	Side
Multi manual feed (OP) • When in multi paper feed	10 × 14 ~ 5 1/2 × 8 1/2	15 ~ 21 lbs.	Recommended recycle paper	Side
• When in single paper feed	10 × 14 ~ 5 1/2 × 8 1/2 ✳For paper of 28 ~ 34.5lbs, letter size or smaller.	14 ~ 34.5 lbs.	No. 2 original, OHP, label, recommended recycle paper	Side

(2) Optical section

Light source	Halogen lamp
Exposure system	Slit exposure by moving the light source
Magnification ratio changing system	By changing the lens position and scan speed.
Lens	Fixed focus lens

(3) Process section

Charging system	(–) DC scorotron system		
Transfer system	(–) DC scorotron system		
Separation system	Discharge plate/separation pawl		
Main charger grid voltage	Copy mode	Simulations No.	Grid voltage
	Standard	8-02	–750V
	Photo	8-03	–460V
	Toner save	8-04	–634V
Charge/Transfer charger applied voltage	–50.0μA ± 4μA		

(4) Developer section

Developing system	Two-component developing system
Toner density detection system	Magnetic sensor system
Toner box capacity	Toner 210 ±5g
Developing bias	DC–200V±3V

- Developer

Material	Iron powder carrier
Charging system	Negatively charged by friction

- Toner

Charging system	Positively charged by friction

(5) Fuser section

Fusing system		Heat roller system
Upper heat roller surface temperature		180°C
Heater lamp	100V	Halogen lamp 1000 W × 1 pc.
	110V	Halogen lamp 1000 W × 1 pc.
	120V	Halogen lamp 1000 W × 1 pc.
	127V	Halogen lamp 1000 W × 1 pc.
	220V	Halogen lamp 1000 W × 1 pc.
	230V	Halogen lamp 1000 W × 1 pc.
	240V	Halogen lamp 1000 W × 1 pc.

(6) Drive section

Main motor standard	3-phase full wave drive, DC brushless Rating: DC32V, max. 1.32A, 1500 rpm

3. Supplies

Middle and South America

No.	Name	Content		Product name	Life
1	OPC drum kit	OPC drum Cleaning blade	x 1 x 1	SF114DR	50K
2	Black developer	Black developer (560g)	x 10	SF114LD (SF114DVx10)	60K × 10
3	Black toner	Black toner cartridge (200g)	x 10	SF114LT (SF114Tx10)	6K × 10
4	Heat roller kit	Upper heat roller Upper fusing separation pawl Fusing bearing (F) Fusing bearing (R) Roller stopper Lower heat roller Lower fusing separation pawl	x 1 x 3 x 1 x 1 x 2 x 1 x 4	SF214HR (For LAG: SF214HR1)	80K

Note 1: The heat roller kit for this series is common with the previous models SF-2314/2414/2514.

Environmental conditions

Observe the following environmental conditions to ensure the copy quality and machine performance.

① Standard condition
20 ~ 25 °C, 65 ±5% RH

② Operational condition

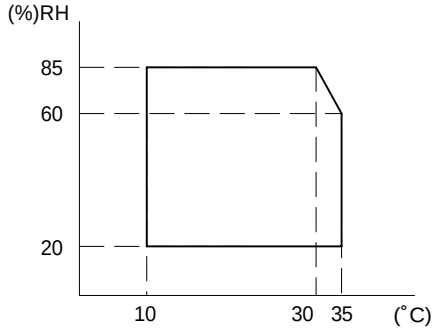

③ Shipping condition of copier (within 2 weeks)

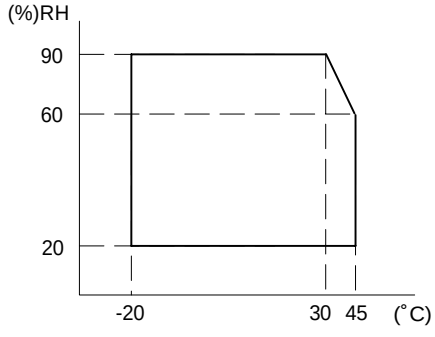

④ Supply storing condition

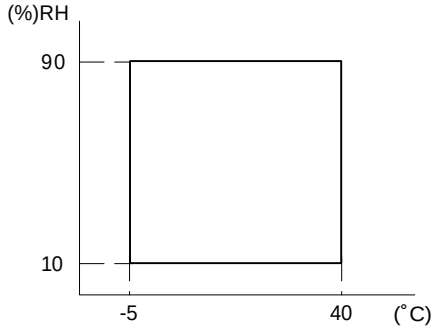

Storage period:
OPC drum → Max. 36 months from production
Developer/Toner → Max. 24 months from production

⑤ Identification of production number

A. OPC drum

The lot no. is of 10 digits. Each digit indicates as follows. This number is printed on the F side flange.

①	②	③	④	⑤	⑥	⑦	⑧	⑨	⑩

① Numeral
Indicates the OPC drum sensitivity.

② Alphabet
Indicates the model code. "M" is the code for this model.

③ Numeral
The end digit of the year of coating.

④ Numeral or X, Y, Z
Indicates the month of coating.
X means October, Y November, and Z December.

⑤ ⑥ Numeral
Indicates the day of coating.

⑦ Numeral or X, Y, Z
Indicates the month of packing.
X means October, Y November, and Z December.

⑧ ⑨ Numeral
Indicates the day of packing.

⑩ Alphabet
Indicates the factory of production. "A" is the code for Nara plant.

B. Developer and toner

The lot number of toner is put on the individual cartridge package and on the group package, and that of toner is put on the bag and the group package.
The lot number is of 7 digits, each digit indicating as follows:

①	②	③	④	⑤	⑥	—	⑦

① Alphabet
Indicates the factory of production.

② Numeral
Indicates the end digit of the year of production.

③ ④ Numeral
Indicates the month of production.

⑤ ⑥ Numeral
Indicates the day of production.

⑦ Numeral
Indicates the sub lot number.

Normal	C	A	B
1	2	3	4

When a change is made on the product in the same operation system:

Normal		C		A		B	
1	5	2	6	3	7	4	8

A,B,C: Operation system

[3] EXTERNAL VIEW AND INTERNAL STRUCTURE

1. External view and internal structure

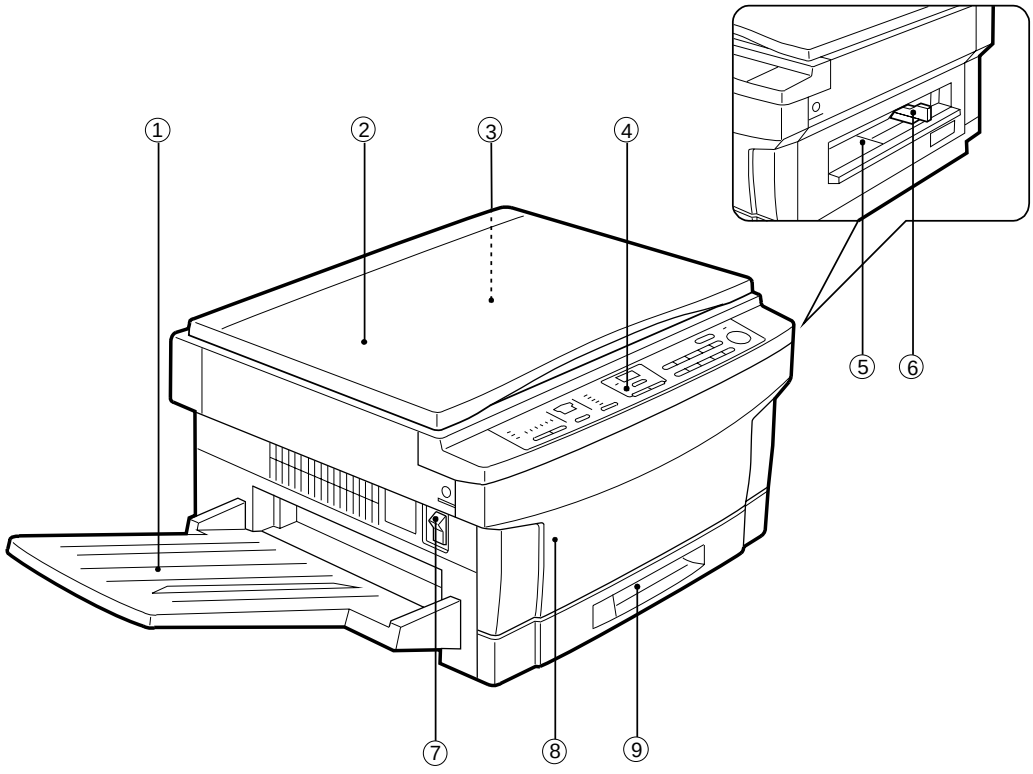

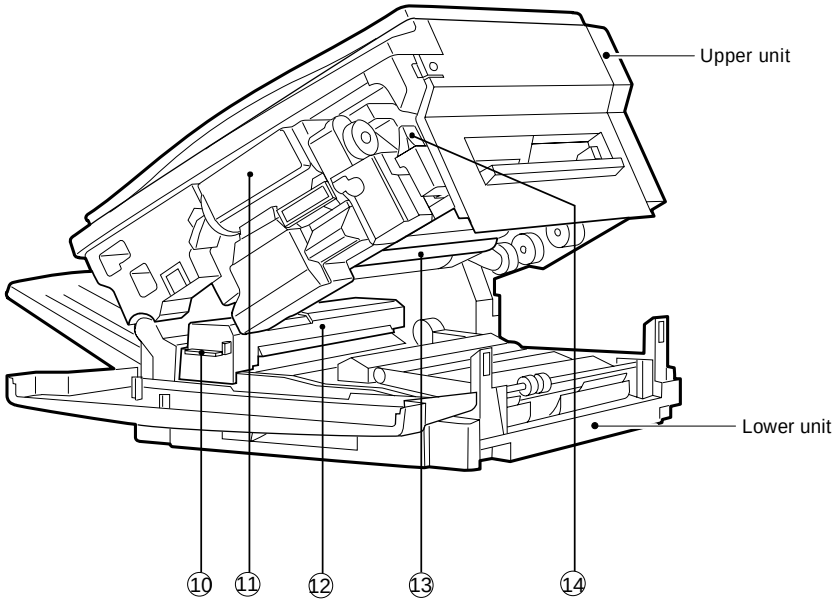

No.	Name	No.	Name	No.	Name
①	Exit tray	②	Document cover	③	Document glass
④	Operation panel	⑤	Manual bypass	⑥	Manual bypass guide
⑦	Power switch	⑧	Front cover	⑨	Paper tray
⑩	Fusing unit lever	⑪	Toner cartridge	⑫	Fusing unit
⑬	Photoconductive drum	⑭	Release lever		

2. Operation panel

SF-1014

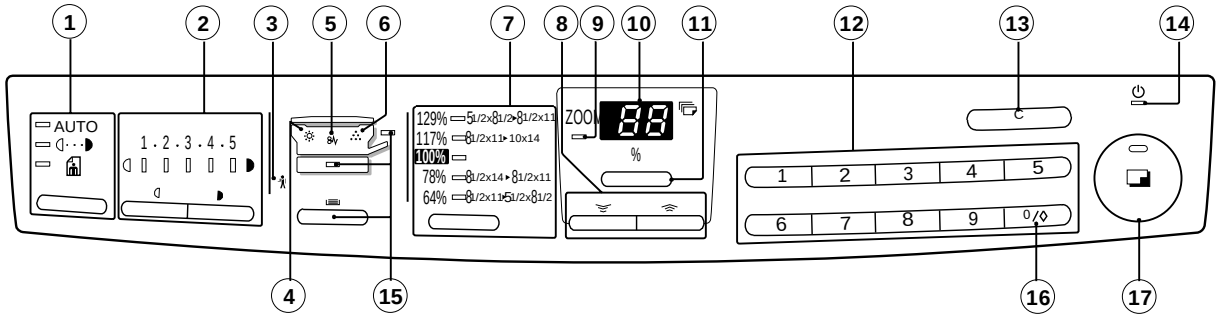

No.	Name	No.	Name	No	Name
①	Auto/manual/photo key and indicators	②	Light and dark keys and exposure indicators	③	Maintenance required indicator
④	Developer replacement required indicator	⑤	Misfeed indicator	⑥	Toner required indicator
⑦	Copy ratio selector key and indicators	⑧	Zoom keys	⑨	ZOOM indicator
⑩	Copy quantity display	⑪	Copy ratio display key	⑫	10-key pad
⑬	Clear key	⑭	Power save indicator	⑮	Tray select key and indicators
⑯	Zero/readout key	⑰	Print button and READY indicator		

3. Cross section

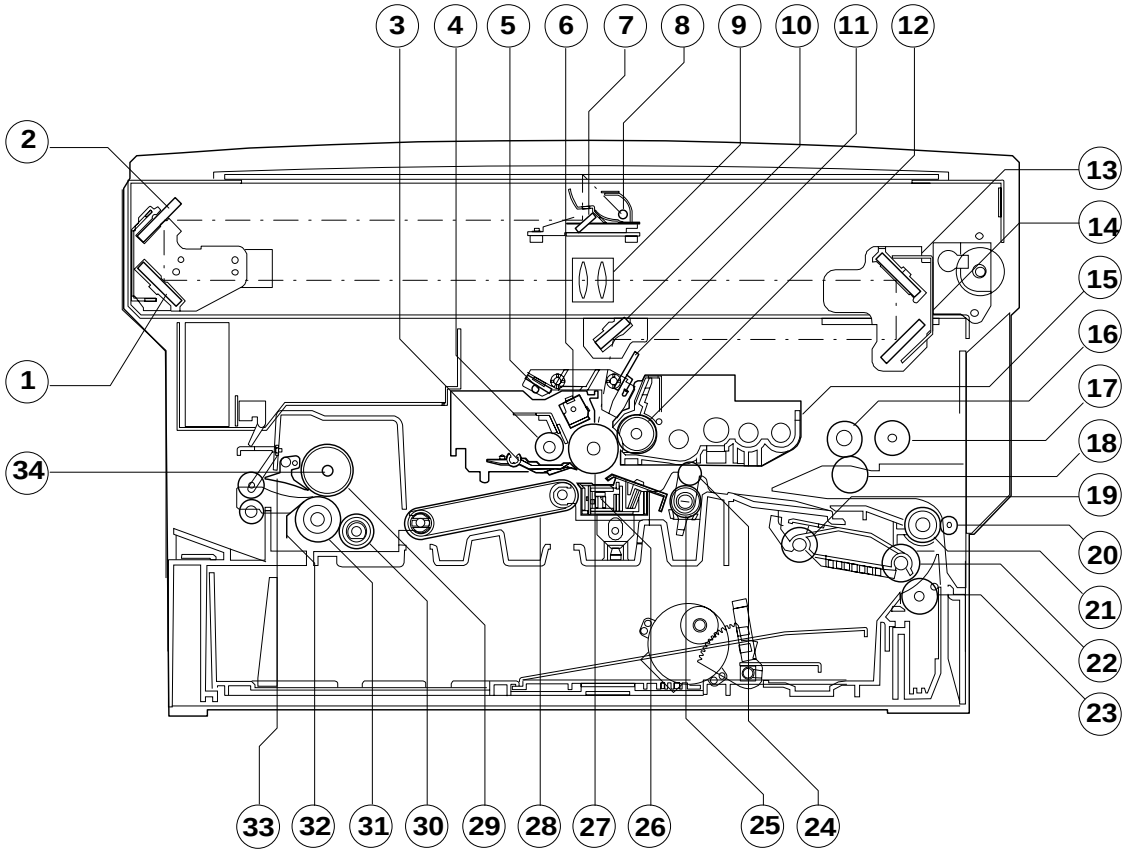

No.	Name	No.	Name	No	Name
①	No.3 mirror	②	No.2 mirror	③	Drum separation pawl
④	Cleaner unit	⑤	Discharge lamp	⑥	Main charger unit
⑦	No.1 mirror	⑧	Copy lamp	⑨	Lens unit
⑩	No.6 mirror	⑪	Blank lamp	⑫	Developer magnet roller
⑬	No.4 mirror	⑭	No.5 mirror	⑮	Developer tank
⑯	Manual paper feed roller	⑰	Manual feed take-up roller	⑱	Manual paper feed follower roller
⑲	Tray paper feed takeup roller	⑳	Tray transport follower roller	㉑	Transport roller (Upper)
㉒	Tray paper feed roller	㉓	Option tray transport roller	㉔	Resist roller
㉕	Resist roller	㉖	Transfer charger	㉗	Photoconductor drum
㉘	Suction belt	㉙	Upper heat roller	㉚	Lower cleaning roller
㉛	Lower heat roller	㉜	Lower separation pawl	㉝	Upper separation pawl
㉞	Heater lamp				

4. Switches, sensors, detectors

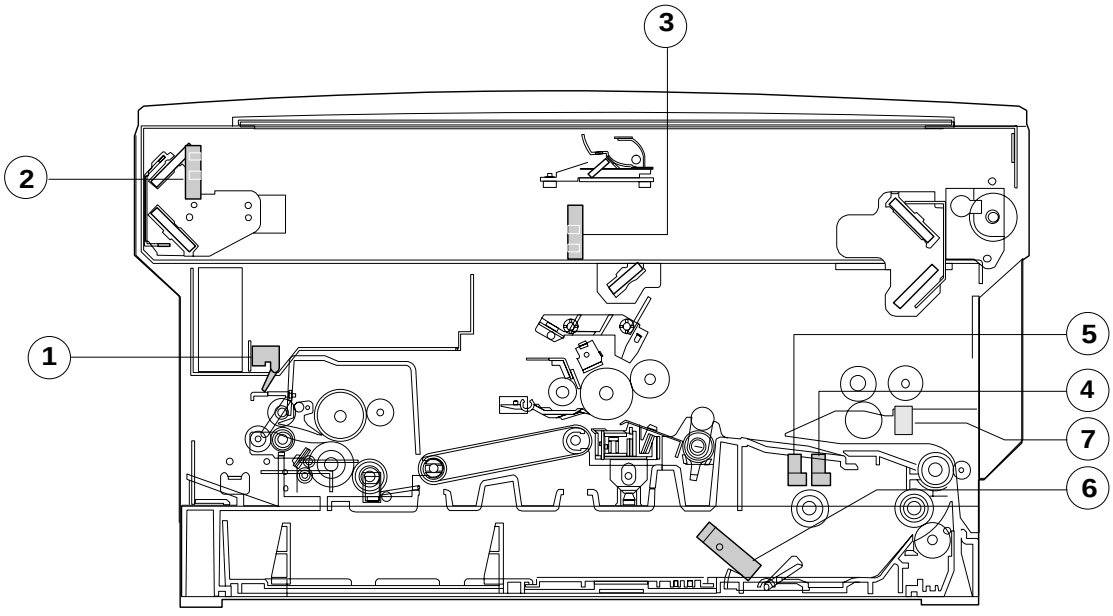

No.	Abbreviation	Function	Type	Operation
①	POD	Paper out sensor	Transmission photo sensor	H when paper is sensed.
②	MHPS	Mirror home position sensor	Transmission photo sensor	H at the home position.
③	LHPD	Lens home position sensor	Transmission photo sensor	H at the home position.
④	PWD	Paper size (large/small) sensor	Transmission photo sensor	L with the large size.
⑤	PPD	Paper transport sensor	Transmission photo sensor	L when paper is sensed.
⑥	CPED1	Tray paper empty sensor	Transmission photo sensor	H when paper is present.
⑦	PID (MFD1)	Paper sensor for Manual paper feed unit (only single Manual Paper feed unit)	Transmission photo sensor	L when the cover is open.

5. Clutches, solenoids

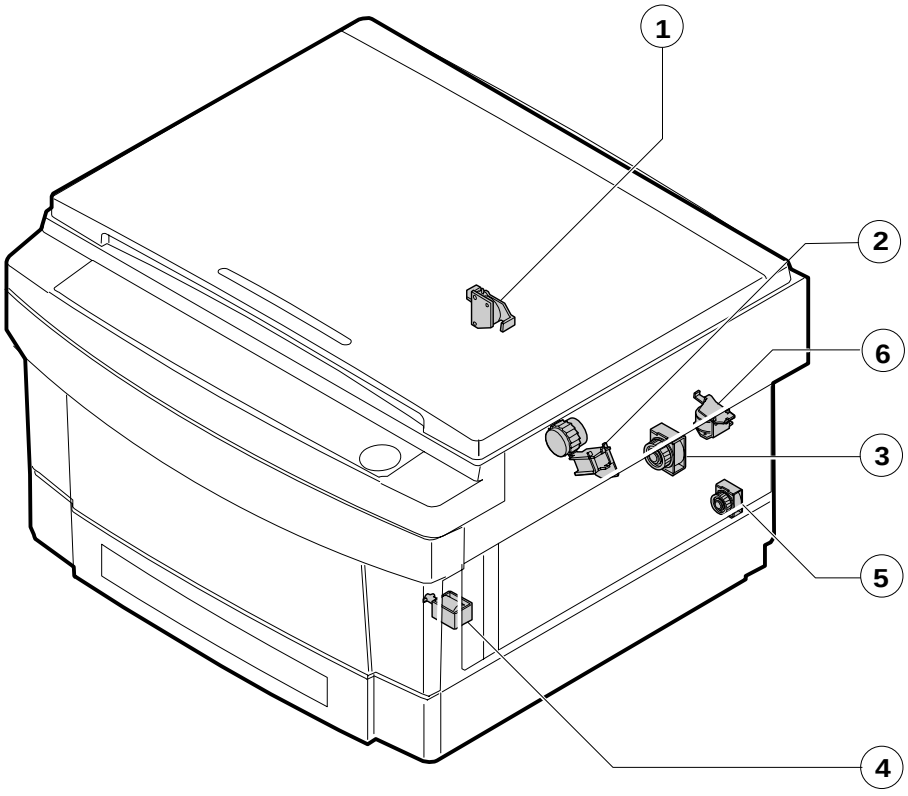

No.	Abbreviation	Name	Function and operation
①	PSPS	Paper separation solenoid	For paper separation solenoid drive
②	RRC	Resist roller clutch	For resist roller rotation
③	TRC	Transport roller clutch	For transport roller rotation
④	MPFS	Manual paper feed solenoid	For takeup roller pressing
⑤	CPFC1	Tray paper feed clutch	For paper feed roller rotation
⑥	MPFC	Multi paper feed clutch	For multi paper feed roller rotation

6. Motors

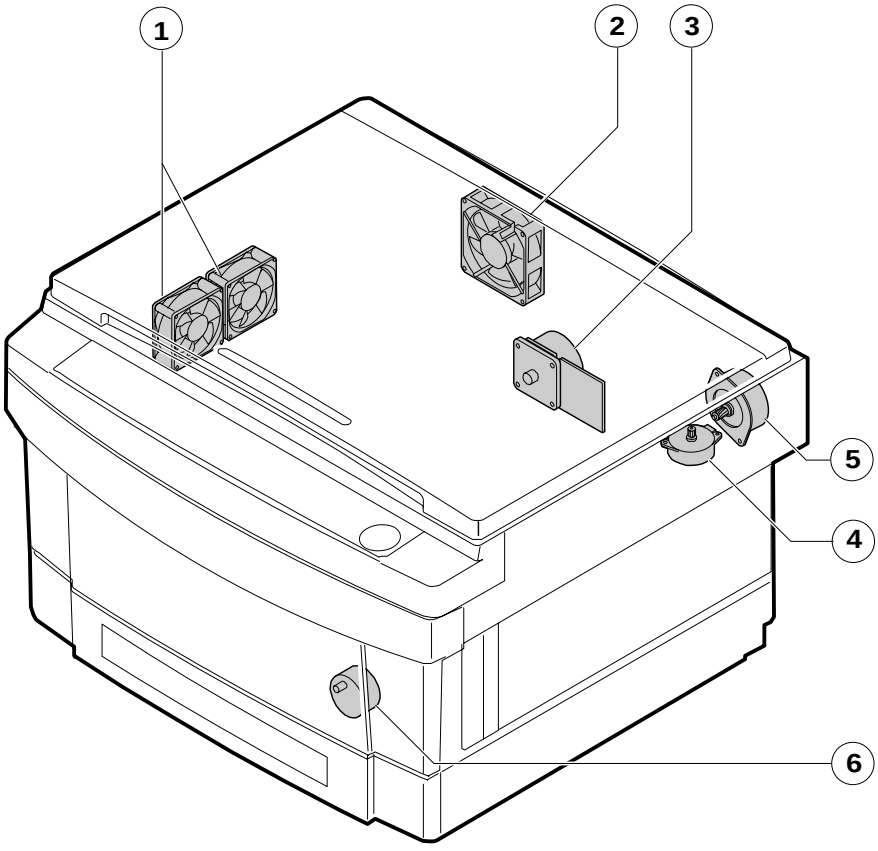

No.	Abbreviation	Name	Function	Type
①	VFM	Paper exit fan motor	For ventilation of the fuser unit. For cooling the machine and removing ozone.	DC brushless
②	CFM	Cooling fan motor	For cooling the optical system	DC brushless
③	MM	Main motor	For the main body drive and the option drive	DC brushless
④	LM	Lens motor	For the optical lens drive	DC stepping
⑤	MRM	Mirror motor	For the optical mirror base drive	DC brushless
⑥	TM	Toner motor	For toner supply	DC synchronous

7. PWBs

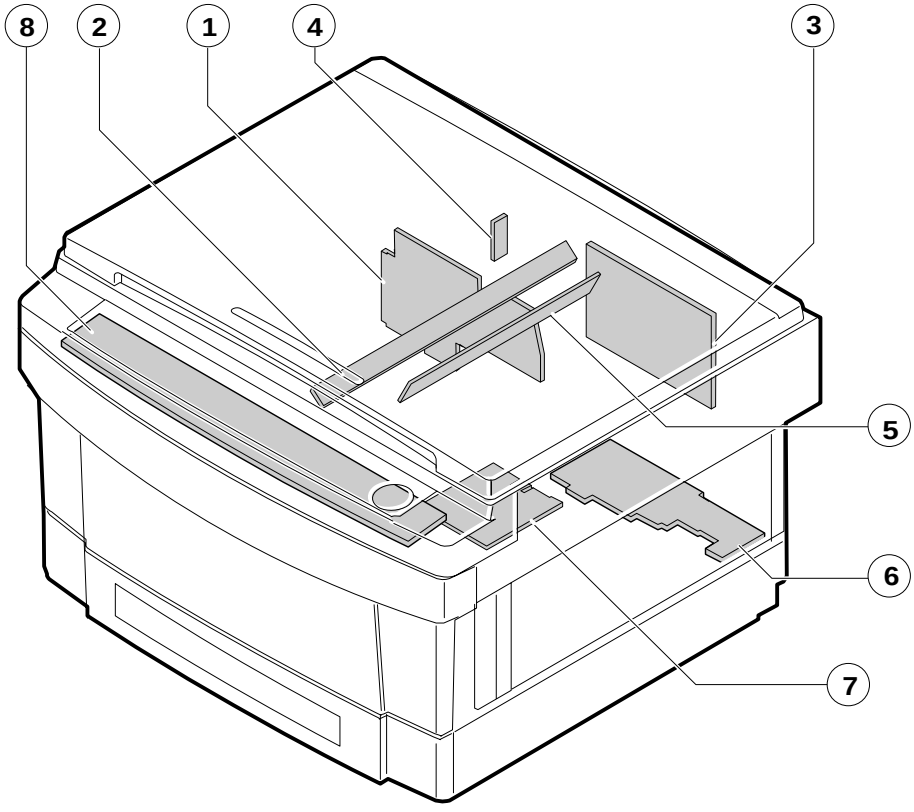

No.	Name	Description
①	AC circuit PWB	AC power input
②	Discharge lamp PWB	Discharge lamp drive
③	Main PWB	Main body control
④	AE PWB	Document density auto exposure detection
⑤	Blank lamp PWB	Blank lamp control
⑥	Lower unit PWB	Lower unit parts control
⑦	High voltage PWB	Supply of the process high voltage and the developer bias voltage.
⑧	Operation PWB	Operation input, display control

[4] UNPACKING AND INSTALLATION

1. Packing drawing

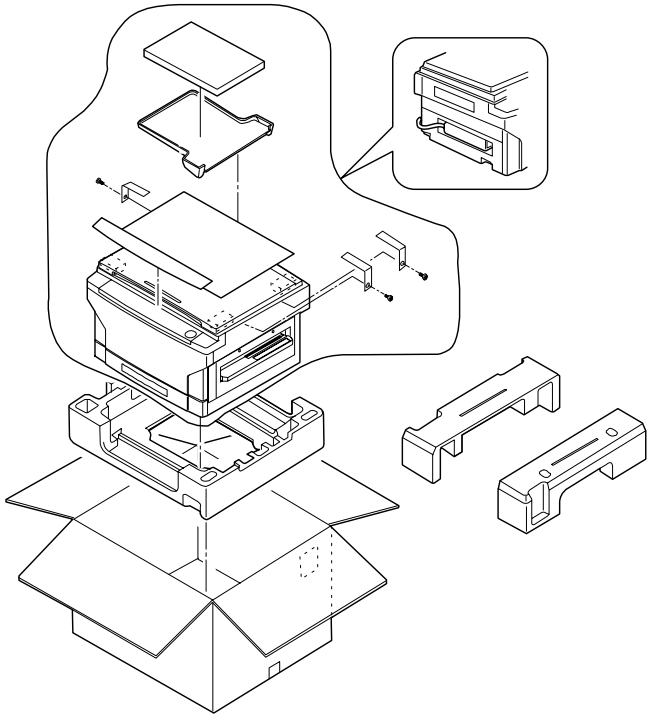

List of packing materials and accessories

	Name	Q'ty
1	Packing case	1
2	Body	1
3	Polyethylene bag for paper exit tray	1
4	Vinyl sheet for body	1
5	Bottom case	1
6	Bottom case pad (L)	1
7	Bottom case pad (R)	1
8	AC cord sleeve	1
9	Paper exit tray	1
10	Instruction Manual	1

2. Installation

Installation conditions

The following installing conditions must be satisfied to assure the normal operations of the machine.

(1) Environment

① **Keep the machine away from direct sunlight and avoid installation near a window or in a bright place.**
(Draw the curtain and close the blind shutter completely.)
The plastic parts and the original cover may be deformed by direct sunlight. Avoid installation near a window even with frosted glass.

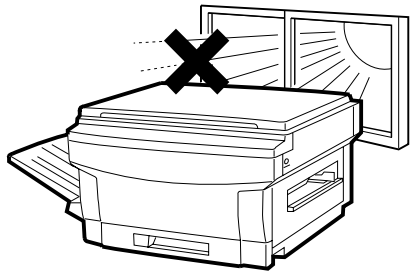

② **Avoid installation in high temperature or high humitity environments. Also, avoid installation where temperature or humidity may change quickly. (e.g., near an air conditioner).**
Otherwise copy papers may be dampened and condensation may be generated in the machine. This may result in paper jams or poor copy quality.

(Ideal conditions): The best suitable conditions for machine operation:
20°C ~ 25°C: 65 ±5%RH

(Temperature/humidity range): 15°C ~ 30°C (59°F ~ 86°F),
20% ~ 85%
65% for 35°C (95°F)

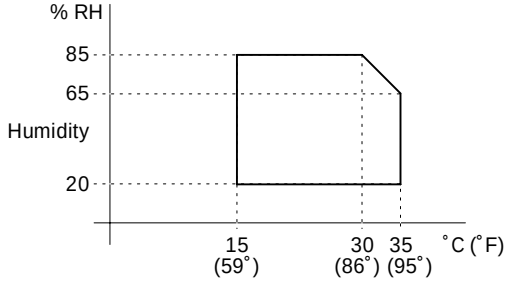

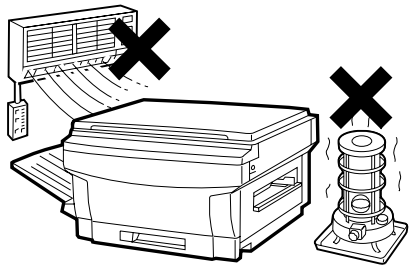

③ **Avoid installation where there is a lot of dust or vibrations.**
If dust enters the machine, it may degrade copy quality and cause malfunctions.

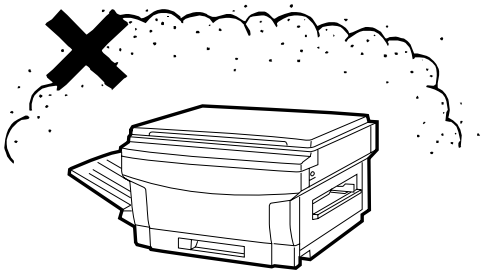

④ **Avoid installation on an unstable surface.**
To assure the proper operations, install on a level surface.

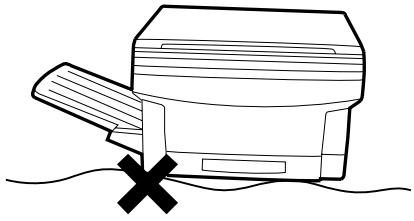

⑤ **Install in a well ventilated place.**

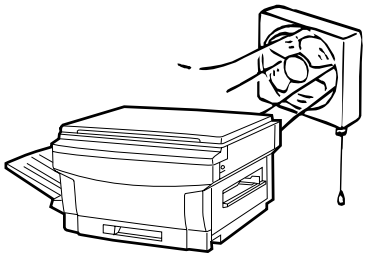

⑥ **Avoid installation where there is inflammable gases or ammonium gases.**
Installation near a diazonium copier may degrade copy quality and cause malfunctions.

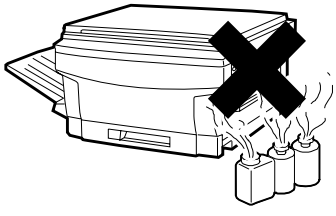

⑦ **Install near a power outlet.**

(2) Space around the machine

Allow a space of about 15 cm (6 inches) between the rear side of the machine and the wall for ventilation of the cooling fan. Also allow sufficient space around the machine for operations.

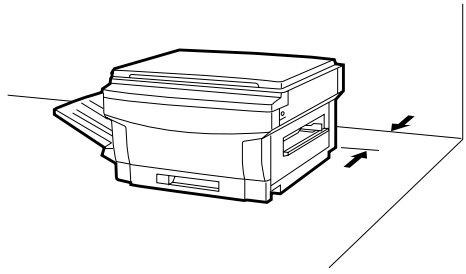

(3) Installing table

Use a level (UKOGM0054CSZZ) to install the machine horizontally.
(Allowable tilt: 5 mm between the front and rear frames)

(Note) If the machine is not installed horizontally, toner density control may not function properly. This may result in poor copy quality.

(4) Power source

① The power source should be the rated voltage ±10% with the capacity corresponding to the max. power consumption.

② Do not use an extension cord, or operate any other equipment from the same wall outlet.

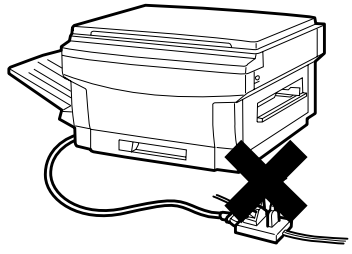

(5) Grounding

To avoid electrical hazard, use the properly grounded wall outlet only.

(Carrying the machine)
When carrying the machine, remove the copy tray and hold the dent portions on the bottom.

3. Installation procedure

(1) Optical system unlocking

① **Unlock the No.2/No.3 mirror unit.**
Remove the No.2/No.3 mirror unit fixing screw (1 pc.) on the left side of the copier.

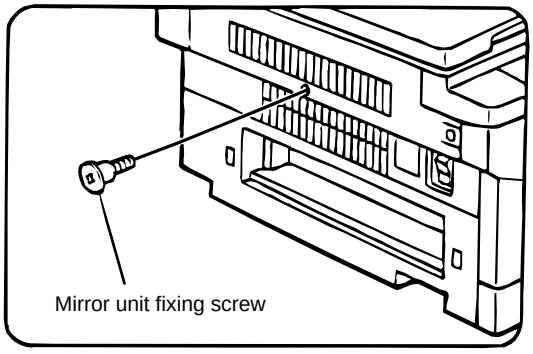

② **Unlock the No.4/No.5 mirror unit.**

Remove the No.4/No.5 mirror unit fixing screws (2 pcs.) on the right side of the copier.

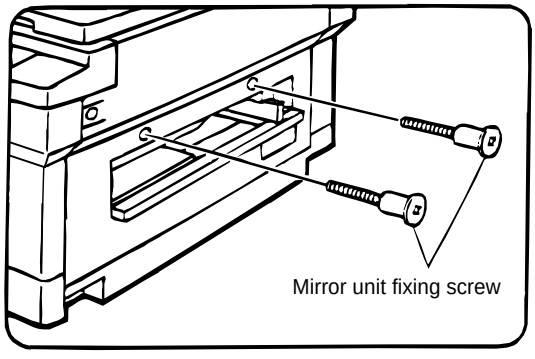

[In the case of SF-1014 with SF-MF14 (Optional) equipped.]
Open the paper feed tray on the right side of the copier.

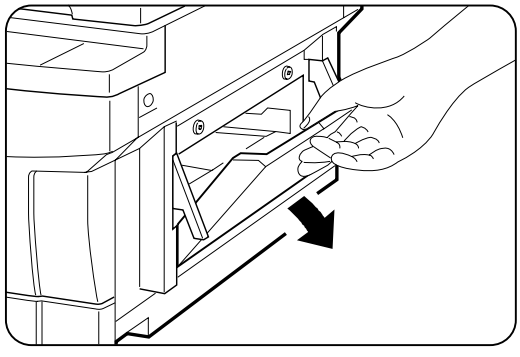

Remove the No.4/No.5 mirror unit fixing screws (2 pcs.).
Then close the paper feed tray.

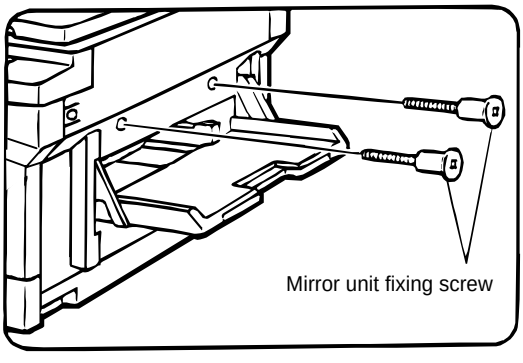

(2) Cassette setting

① **Pull out the cassette.**
Lift the cassette and slowly pull it out from the copier until it stops.

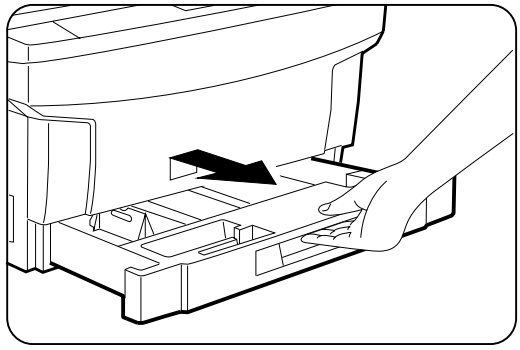

② **Loading copy paper.**
Set the copy papers in the cassette. Do not exceed the limit line indicator.

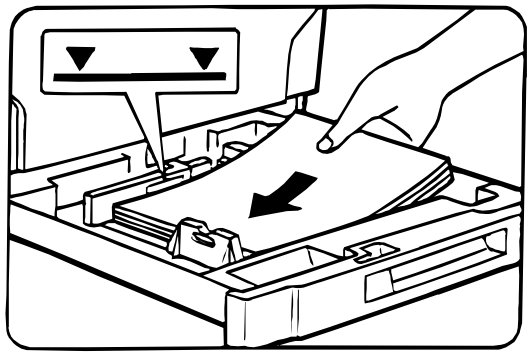

Gently insert the cassette fully into the copier.

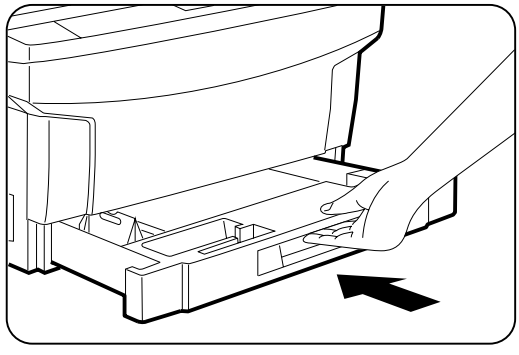

(3) Developer setting

① **Open the front cabinet.**
Push the front cabinet open buttons which are on the left and right sides of the copier, and open the front cabinet.

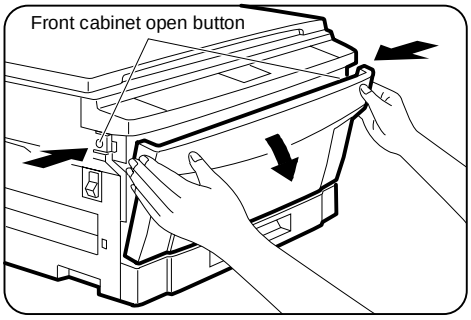

② **Open the toner cartridge.**
While pressing the toner cartridge release lever (B), open the toner cartridge.

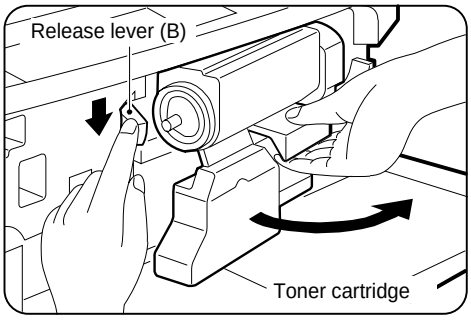

③ **Remove the toner cartridge.**
Slowly turn the toner cartridge clockwise to remove.

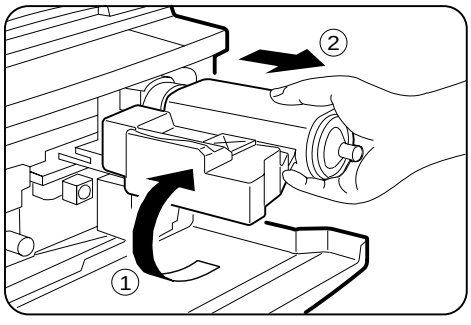

④ **Remove the developing unit.**
Loosen the fixing screw (step screw) which is fixing the copier and the developing unit, and slowly pullout the developing unit and Lenz hold Plate from the copier.

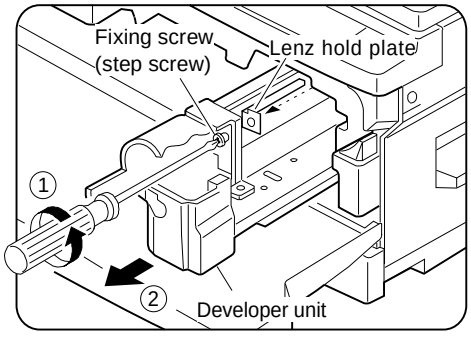

⑤ **Remove the developer tank.**
Slightly open the pawl which is fixing the developing unit and the developer tank with a screw driver, and pull out the developer tank.

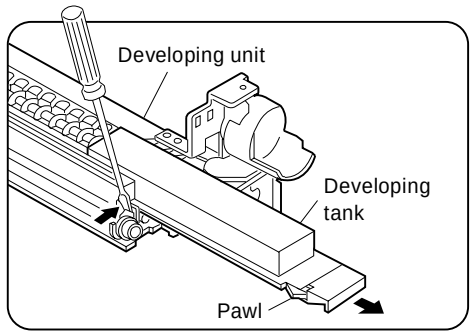

⑥ **Supply developer.**
Supply a bag of developer to the developer supply port of the developing unit.
At that time, move the bag of developer to supply developer evenly.

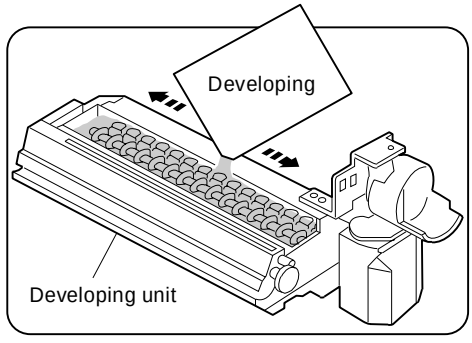

⑦ **Install the developer tank.**
Insert the developer tank to the developing unit along the guide of the developing unit.
At that time, check that the developer tank is securely fixed in the developing unit.

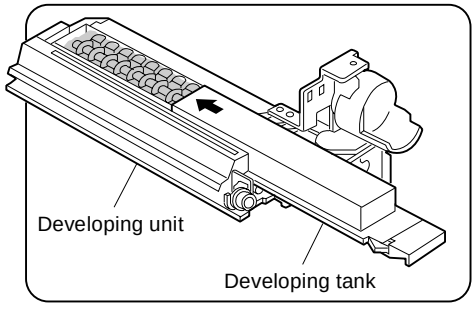

⑧ **Install the developing unit.**
Slowly insert the developing unit into the copier along the guide of the copier until it stops.
Tighten the fixing screw which was removed in procedure (D), and fix the developing unit to the copier.

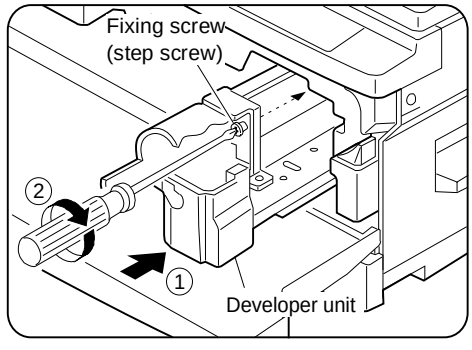

(4) Toner supply

① **Shake the toner cartridge up and down.**
Shake the toner cartridge up and down 9 to 10 times.

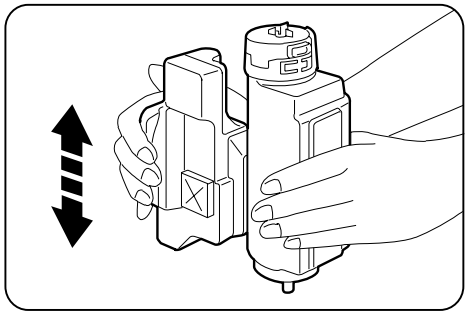

② **Install the toner cartridge.**
Install the toner cartridge to the copier along the guide of the copier.
Turn the toner cartridge counterclockwise to lock.

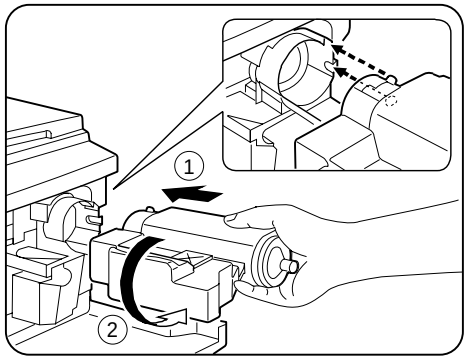

③ **Supply toner.**
Remove the sheet from the toner cartridge and supply toner.
Slowly return the toner cartridge to the original position.

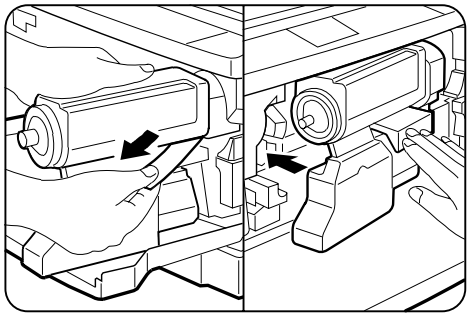

④ **Close the front cabinet.**

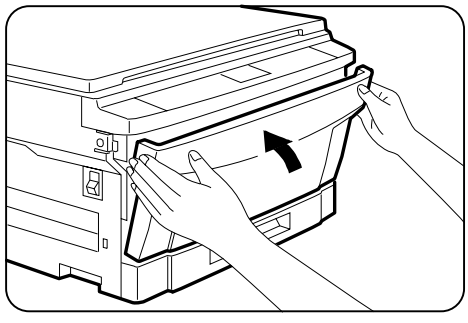

(5) Toner density sensor level check

① **Turn on the power switch of the copier.**

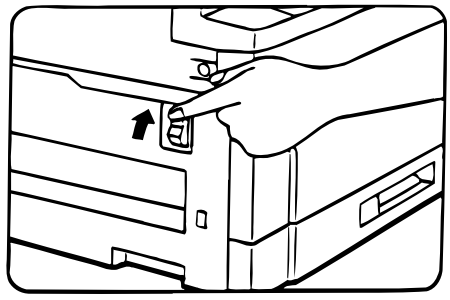

② **Adjust the developer level.**

(a) Perform the key operations of simulation 25 sub 2.

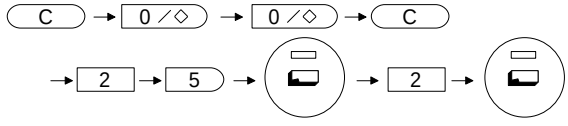

With the above key operations, simulation 25 is performed and the developer is stirred for 3 minutes.

(b) After stirring the developer for 3 minutes, the toner density level is read by the main PWB.
During stirring, the toner density sensor level is displayed on the MULTI COPY display. (Range: 1 ~ 99)
[Note] If the simulation is cancelled during execution, the automatic reading cannot be performed. Do not cancel the simulation during execution.

(c) Press the CLEAR key three times to cancel simulation 25.

C → C → C

(6) Accessory attachment

Attach the copy tray.

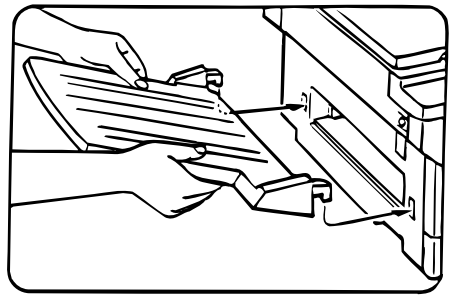

4. Locking procedure for transit or repacking

In general, reverse the procedures in "3. Installation procedure." For the optical system lock, perform the following procedure.

(1) No.2/No.3 mirror unit (Mirror base B) lock

① Perform locking with the unit at its home position (normal copy position) with the power ON and with the mirror stopped and with the external covers installed.

② Lock the unit with the mirror unit fixing screw. (The hole in the left cabinet)

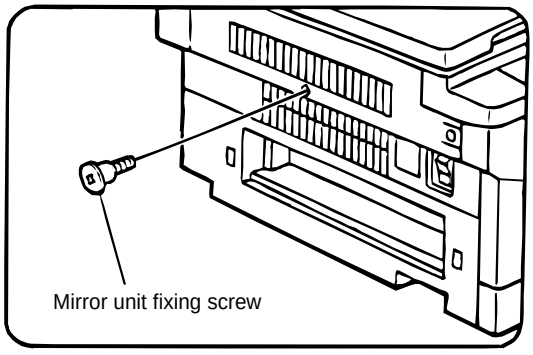

(2) No.4/no.5 mirror unit (Mirror base C) lock

① Turn off the power at the 64% position. Perform locking with the external fitting installed.

② Open the paper feed tray at the right side of the body, and fix the unit with two fixing screws. (Two holes in the right cabinet)

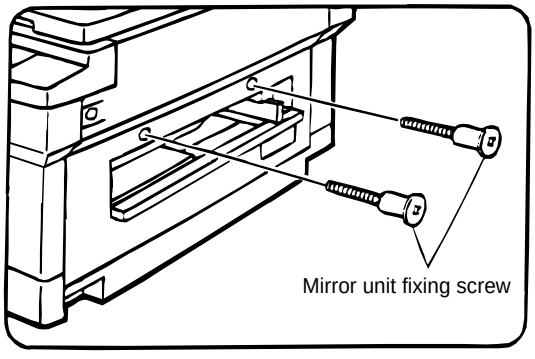

[SF-1014 with SF-MF14 (Optional) equipped.]

① Turn off the power at the 64% position. Perform locking with the external fitting installed.

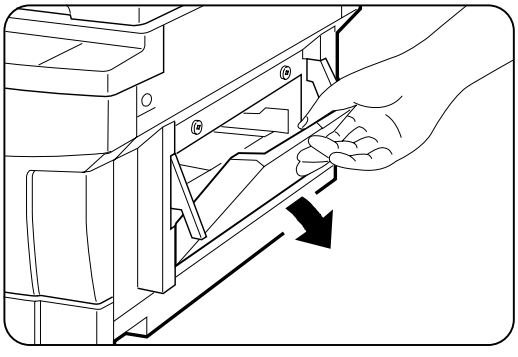

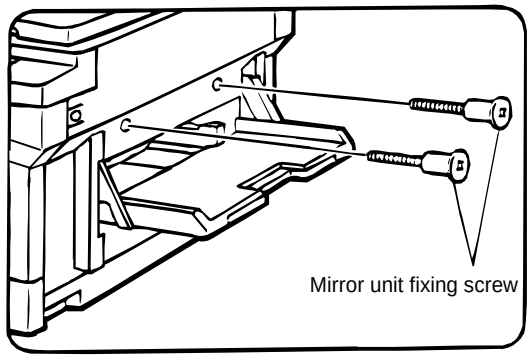

② Open the paper feed tray at the right side of the body, and fix the unit with two fixing screws. (Two holes in the right cabinet)

5. Optional multi bypass feeder unit Installation Manual

(1) Open the upper unit of the main copier unit.

① Press the release buttons on the left and right sides of the main copier unit's front cover, then open the front cover.

② Push the upper half release lever (green) to the right and down, then gently open the upper unit.

(2) Release the lock for the manual bypass unit and remove the manual bypass unit.

① Release the manual bypass unit by pressing upward on the rock claws (green; 2 locations) which lock it in place in the main copier unit's upper unit.
The manual bypass unit will come out toward you slighly.

② Pull out upon the manual bypass unit to remove it from the main copier unit.

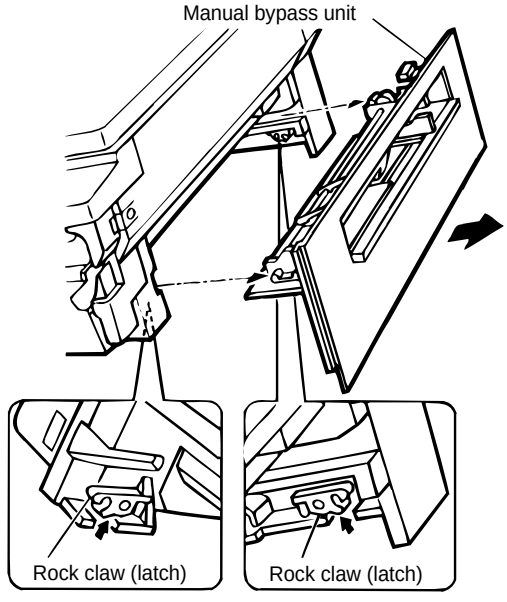

(3) Mount the multi bypass feeder unit onto the main copier unit.

① Slide the positioning pins which project from the multi bypass feeder unit in to the grooves in the main copier unit, then push the multi bypass feeder unit into place to in stall it.
At this time, to be sure that the multi bypass feeder unit is securely installed, push down once more on the fourcorners of the unit. (If it has not been securely installed, "CH" may appear in the COPIES MADE display when the power is turned on.)

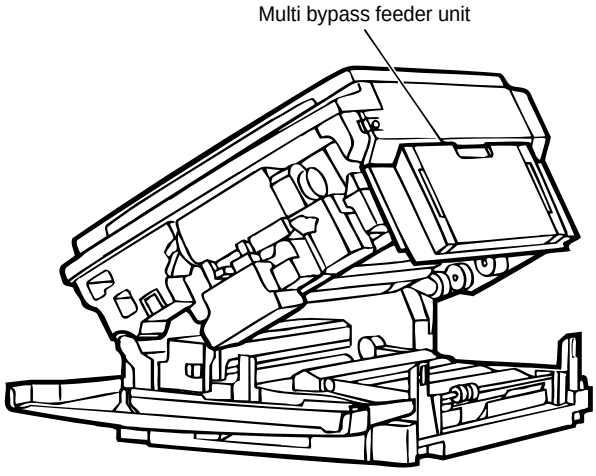

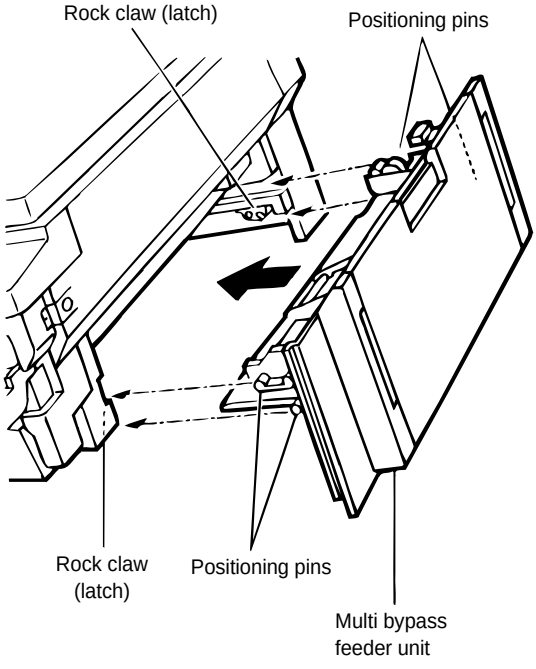

② Close the upper unit of the main copier unit.

[5] GENERAL DESCRIPTIONS OF EACH SECTION

The general descriptions of the following sections are given:

① Paper feed section

② Separation, transport section

③ Fuser, paper exit section

④ Developer section

⑤ Optical system

⑥ Image forming section

Internal structure

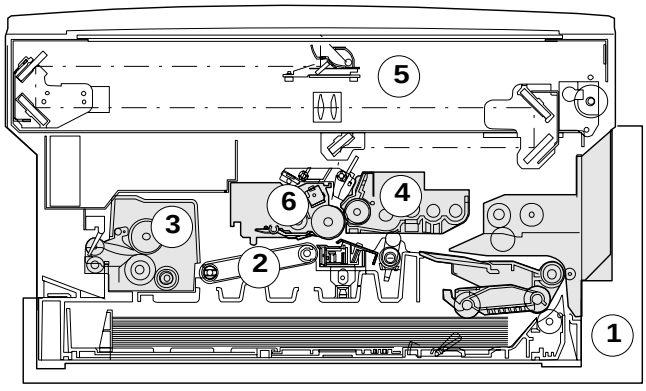

1. Paper feed section

The paper feed system is in two ways: the tray feed and the manual feed. The cassette is of the universal type and has the capacity of 250 sheets. It is attached and detached at the front cabinet, that is, the front loading system.
The manual paper feed is single for the this model. (The multi paper feed unit (SF-MF14) is an option.)

(Tray paper feed operation)
The cassette paper feed clutch (CPFC) turns on, the paper feed roller shaft, the paper feed roller, and the takeup roller rotate. At the same time, the roller release arm is lowered by the limiter spring. As a result, the takeup roller falls by its own weight to reach the paper surface, performing the paper feed operation.

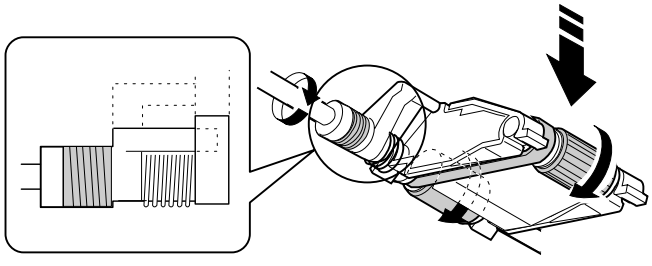

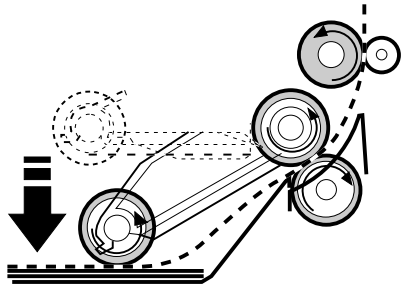

When the CPCF turns off, rotation is stopped, and the takeup roller is pushed up by the roller release arm spring to the position.

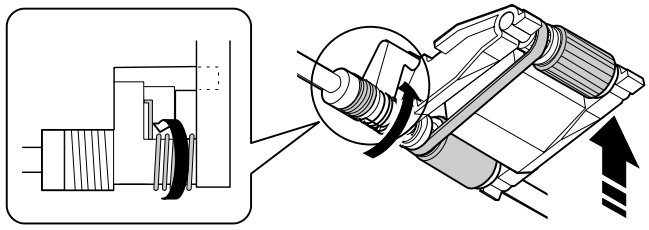

(Manual paper feed operation) Multi
When the solenoid B (MPFS) turns on, the takeup roller falls and the gate rises.
Almost simultaneously the solenoid A (MPFC) turns on and the takeup roller and the paper feed roller turns to perform the paper feed operation.

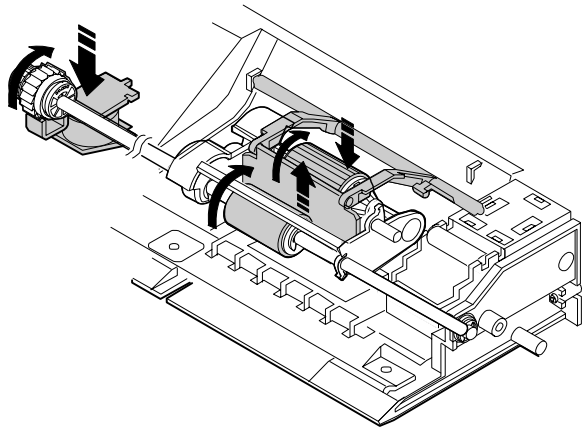

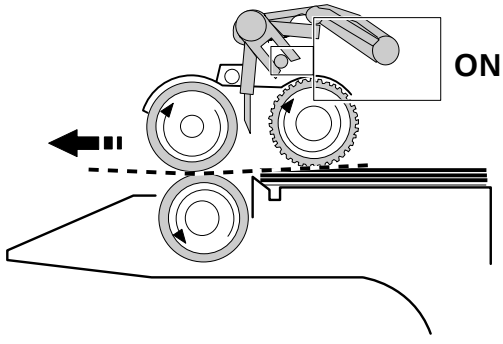

When the PPD turns on, the MPFS turns off and the RRC turns on. Almost simultaneously the MPFC turns off to return the roller and the gate to the initial state.

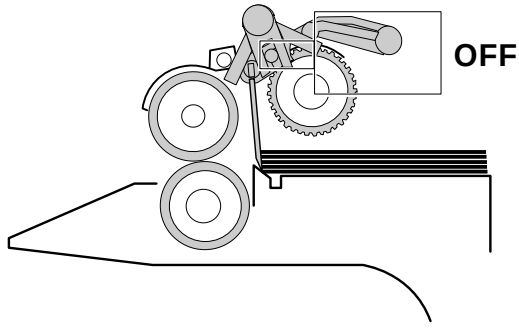

2. Separation, transport section

After passing the resist roller section, the paper is transported to the transfer section. After transfer, the paper is separated from the drum by the separation electrode and the drum separation pawl, then transported to the fuser section by the transport belt.

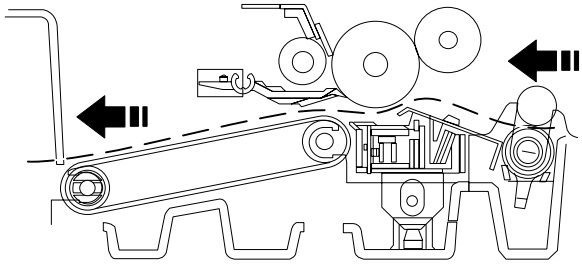

3. Fuser, paper exit section

The toner image transferred on the paper is fused by the heat and pressure of the upper and the lower heat rollers. After fusing, discharge static electricity on the paper with the discharge brush. Then the paper is discharged to the copy tray.

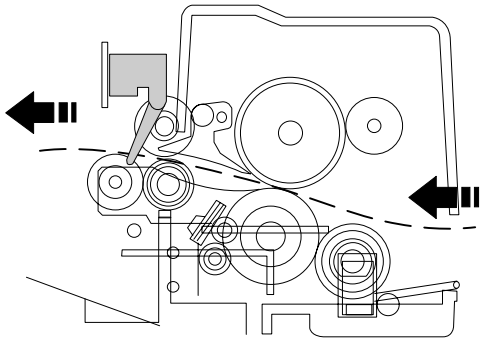

- Temperature control

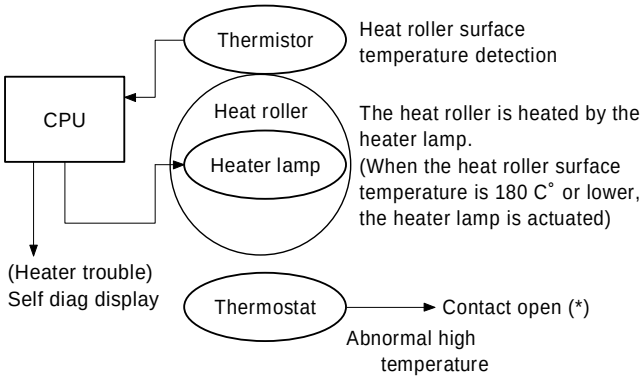

- Abnormally high temperature (H3)
- Abnormally low temperature (H4)
- Thermistor disconnection (H2)

✳ When the thermostat contact is open, it is required to press the reset button in the upper side of the thermostat. (The contact is not reset automatically.)

4. Developer section

4-1. General descriptions

(1) Two-component developer

The developer is composed of toner and carrier.
Carrier serves as a medium for attaching toner onto the electrostatic image on the photoconductor drum.
By stirring toner and carrier, they are rubbed to be charged positive (+) and negative (–) respectively.
Since developer will deteriorate to degrade copy quality, it should be replaced regularly.

(2) Two-component magnetic brush development

The rotatable non-magnetic sleeve is provided over the magnet roller and is rotated.
Carrier forms a magnetic brush on the sleeve surface by magnetic force to attach toner onto the electrostatic image on the photoconductor drum.

(3) Developing bias

When the photoconductor is charged and exposed to light (exposure), the surface potential (voltage) of the photoconductor will not be lost completely. (The residual potential remains.)
Toner is attracted to the photoconductor by this residual potential, dirtying the photoconductor. As a result, a dirty copy of white background is generated.
To prevent against this, a voltage of the same polarity and higher than the residual potential is applied to the MG roller, preventing toner from being attached to the photoconductor surface.

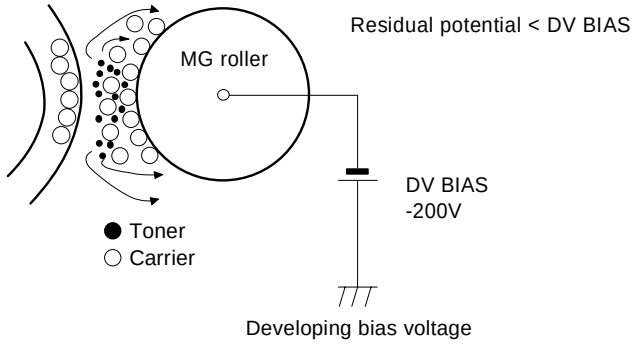

5. Optical system

5-1. General descriptions

- The optical system is composed of the fixed focus lens and six mirrors.
  Since the fixed focus lens is employed, No.4/No. 5 mirror base is moved as well as the lens to change the distance between the document and the drum (OID, Original Image Distance) for reduction and enlargement.
  To move the lens and No.4/No. 5 mirror unit, he stepping motor is driven by the signal from the main control PWB to allow zooming of 0.70 to 1.22 (inch series: 0.64 ~ 1.29) with 1% increment. (The SF-2314 has no zooming function, and its lens and No.4/No.5 mirror base are fixed.)
- Exposure is adjusted by changing the voltage of the copy lamp. The copy lamp unit is provided with the AE sensor for detection of the original density to adjust the light quantity of the copy lamp according to the original density.
- For exposure, the slit exposure system is employed where the light source is moved. (The original table is fixed.)

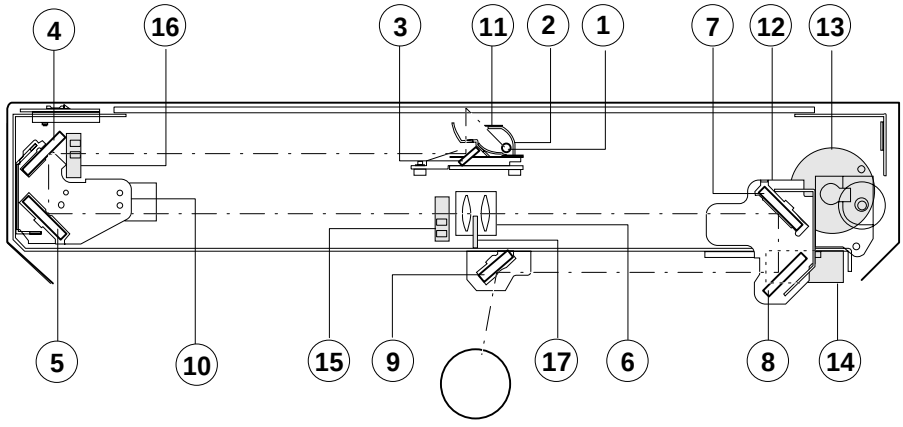

①	Copy lamp	②	Reflector	③	No. 1 mirror
④	No. 2 mirror	⑤	No. 3 mirror	⑥	Lens
⑦	No. 4 mirror	⑧	No. 5 mirror	⑨	No. 6 mirror
⑩	No. 2/No. 3 mirror base unit	⑪	Copy lamp unit	⑫	No. 4/No. 5 mirror base unit
⑬	Mirror motor	⑭	Lens/No. 4/No.5 mirror base drive motor	⑮	Lens home position sensor
⑯	Mirror home position sensor	⑰	Auto exposure sensor		

(1) Original table

The original table is fixed, and originals are set to the left frame side as the reference.

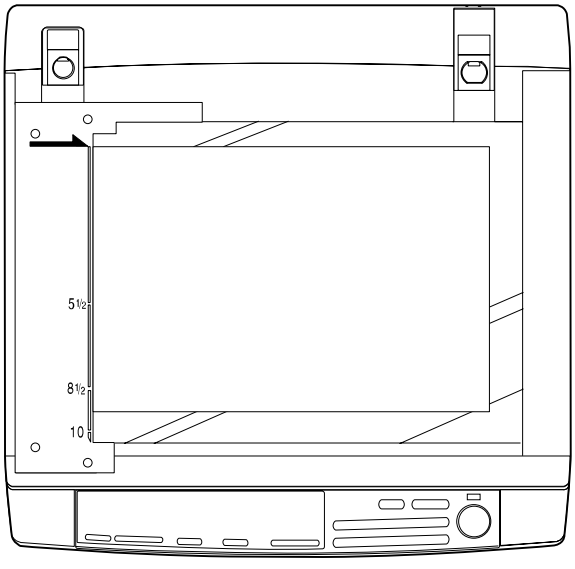

(2) Copy lamp

100V system (285W)
200V system (285W)

(3) Mirror

Six mirrors are used.
No. 1 mirror is provided in the copy lamp, No. 2/3 mirrors at the No.2/3 mirror base, No. 4/5 mirrors at the No. 4/5 mirror base. The No.2/3 mirror base is scanned during copying. The No.4/5 mirror base is moved to change the distance between the original and the photoconductor during zoom copying.

(4) Lens (Fixed focus lens)

- Construction (One group 3 lenses)
- Brightness (F8)
- Focus (175mm)

(5) Lens home position sensor (LHPS)

This sensor is used to sense the lens position. The sensor output signal serves as the basic signal to control the copy magnification ratio.

(6) Lens base

The lens is mounted to this lens base. It is moved in the paper feed direction in reduction copying, and in the paper exit direction in enlargement copying.

(7) Lens drive shaft

This shaft is to control the optical axis of the lens in zoom copying. The lens follows on the slide base shaft.

(8) Lens drive wire

The wire is used to drive the lens base and the 4/5 mirror base.

(9) No. 4/5 mirror base

The No. 4/5 mirror is installed to this base. It is moved in zoom copying in order to fit the distance between the original and the photoconductor.

(10) Mirror motor

The mirror motor is a stepping motor, and used to move the copy lamp unit and the No. 2/3 mirror base in order to obtain the rpm corresponding to each magnification ratio.

(11) Mirror home position sensor (MHPS)

Used to sense the home position of the copy lamp unit. This sensor is a photo transmission type sensor.

(12) No. 2/3 mirror base

The No. 2/3 mirrors are attached to this base. The mirror base is scanned by the mirror motor.

(13) Copy lamp unit

This is composed of No. 1 mirror, the thermal fuse, the copy lamp, the exposure adjustment plate, and the reflector, and is scanned by the mirror motor.

(14) Thermal fuse

The thermal fuse is closely attached to the reflector in order to prevent against abnormal temperature rise in the optical system. In case of abnormal temperature rise, the power for the copy lamp is turned off.

100V system (117°C)
200V system (117°C)

(15) Reflector

Light from the copy lamp is reflected onto the original.

(16) Exposure adjustment plates

Four exposure adjustment plates are attached to the copy lamp unit to adjust the exposure balance in the front and the rear frame direction.

(17) Mirror base drive wire

This wire is used to transmit the drive power of the mirror motor to the copy lamp unit and the No. 2/3 mirror base to scan the mirror base.

(18) Lens drive motor

This is a stepping motor, which is used to move the lens and the No. 4/5 mirror base.

(19) AE sensor

The original density is detected with the intensity of the copy lamp light reflected from the original. The measurement area is the mirror base scan area of about 100mm at the center.
The element is a photo diode.

5-2. Basic operations

(Relationship among the original, the lens and the image in each magnification ratio)

Normal copy: The distance between the surface of original on the table glass and the lens is made equal to the distance between the lens and the exposure surface of the photoconductor to make the original and the image equal to each other.

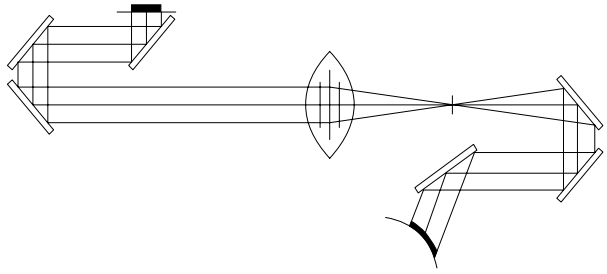

Enlargement copy: The lens is nearer to the original when compared with the normal copy to shorten the distance between the original surface and the lens.
The No. 4/5 mirror base is positioned further away from the lens to increase the distance between the lens and the exposure surface of the photoconductor.
The distance between the original and the exposure surface of the photoconductor is greater than that in the normal copy.

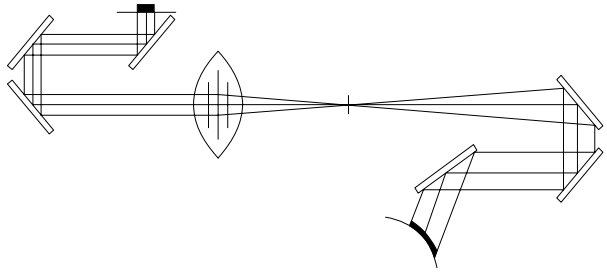

Reduction copy: When compared with the normal copy, the lens comes closer to the photoconductor to increase the distance between the original and the lens. The distance between the lens and the exposure surface of the photoconductor is decreased.
The No. 4/5 mirror base is positioned further away from the lens.
The distance between the original and the exposure surface of the photoconductor is longer than that in the normal copy.

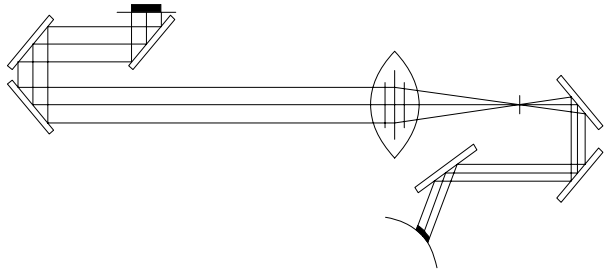

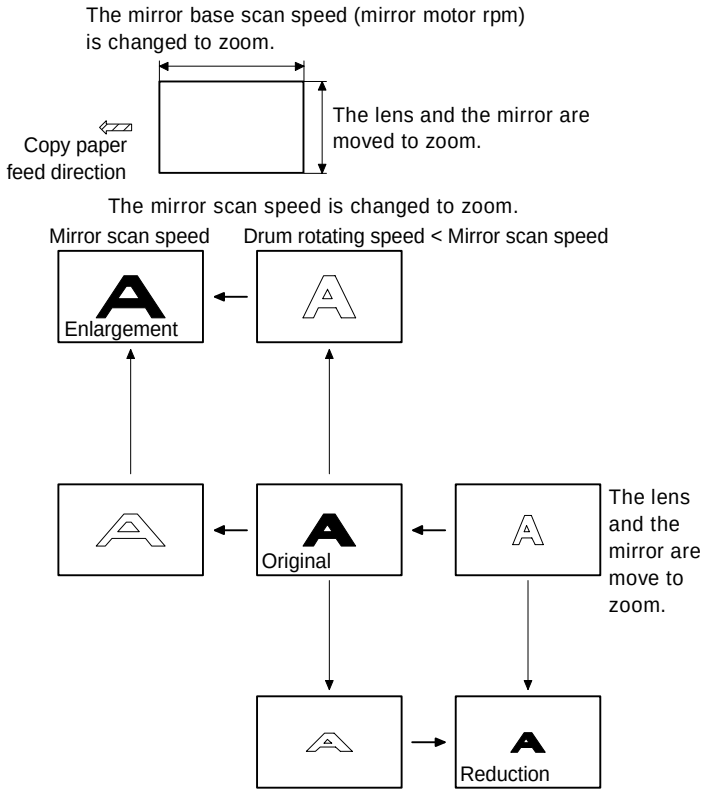

(Copy lamp control in each copy density)

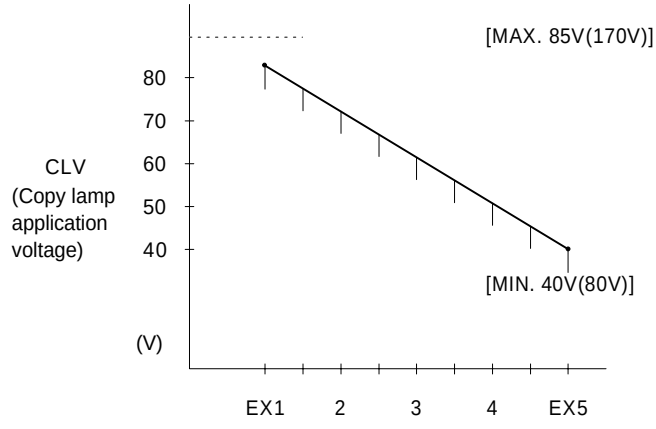

(Optical system dirt correction)

The SF-1014 perform dirt correction by changing the copy lamp intensity according to the dirt degree in the optical system (the copy lamp unit, No. 1 mirror, No.2 mirror, No.3 mirror) to prevent against remarkable degrading of copy quality.

The reference value is the AE sensor output value which is obtained when the reference plate is exposed with the copy lamp voltage of 67.7V (135.4V) at power ON.

This value is checked with sim 44-02.

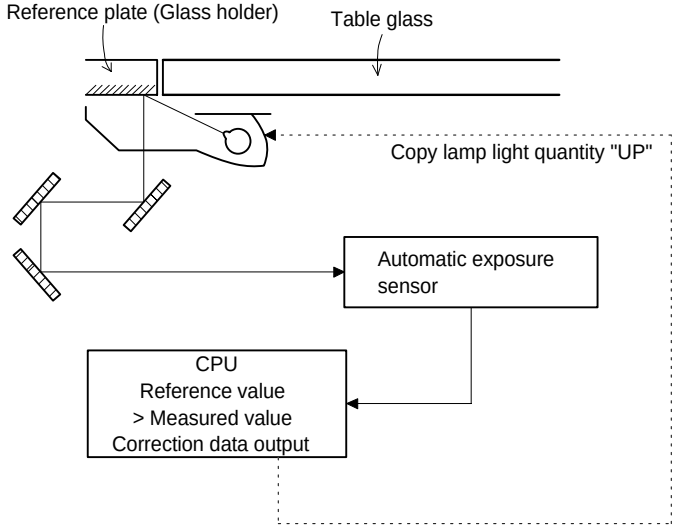

6. Copy process

(1) Photoconductor

- This model uses OPC (organic photoconductor) as photoconductive material.

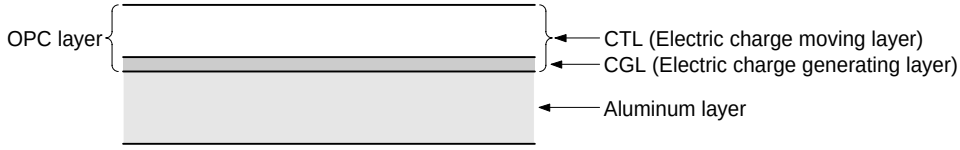

(2) Process diagram

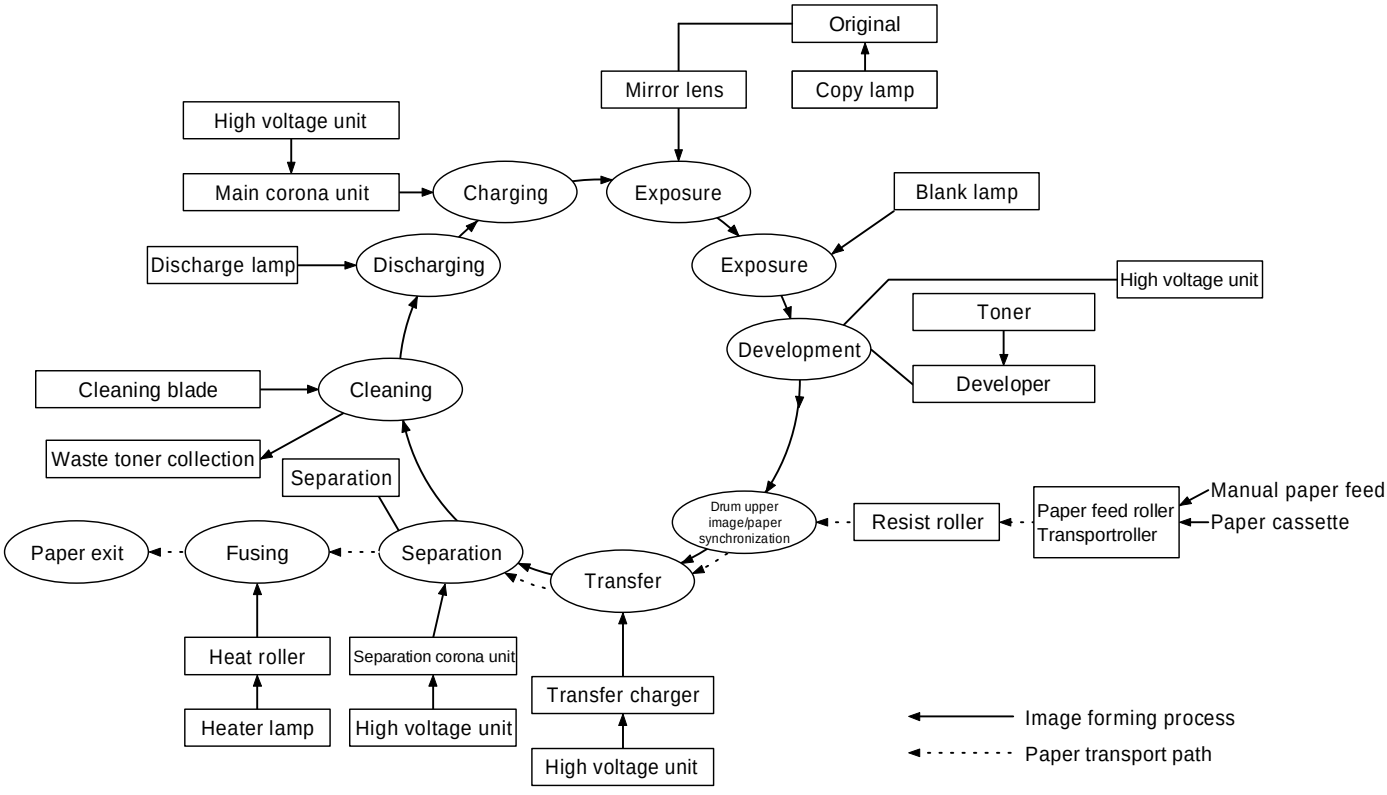

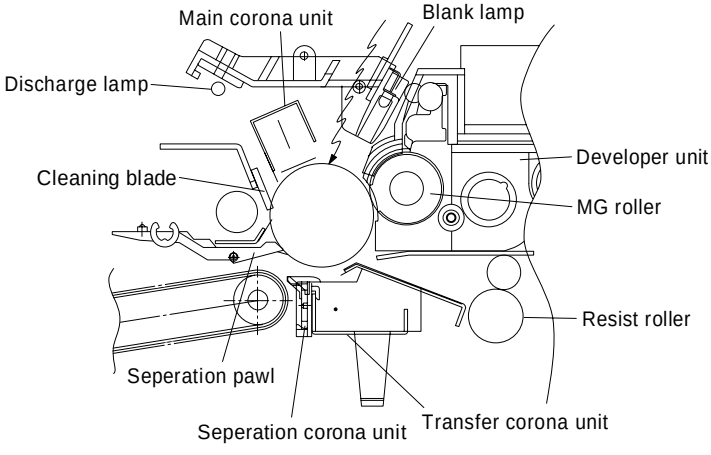

(3) Actual process

Step 1 (charging)

The OPC drum is negatively charged by corona discharge of the transfer charger . Positive charges are generated in the aluminum layer.

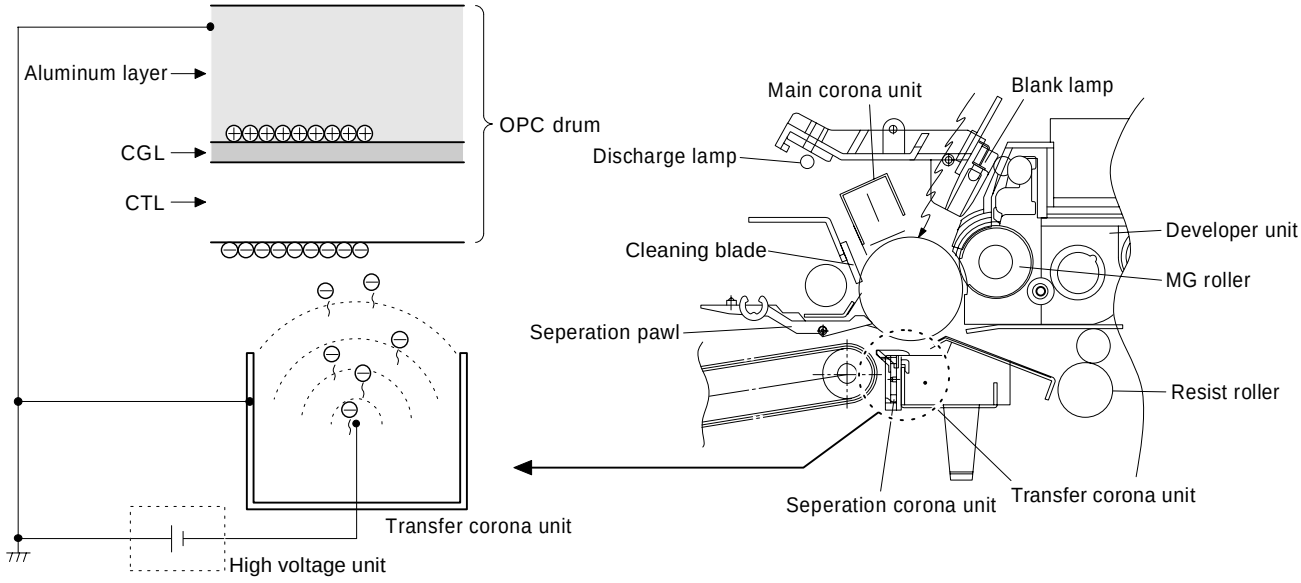

Step 2 (Discharging)

When the OPC drum is exposed to the discharge lamp light, positive and negative charges are generated in the OPC drum CGL. The negative charges move to the positive charges generated in the aluminum layer in step 1, and the positive charges move to the negative charges on the OPC drum surface charged in step 1. The positive charges and the negative charges are neutralized each other in the aluminum layer and on the OPC drum surface. As a result, the OPC drum surface potential becomes 20V ~ 30V.

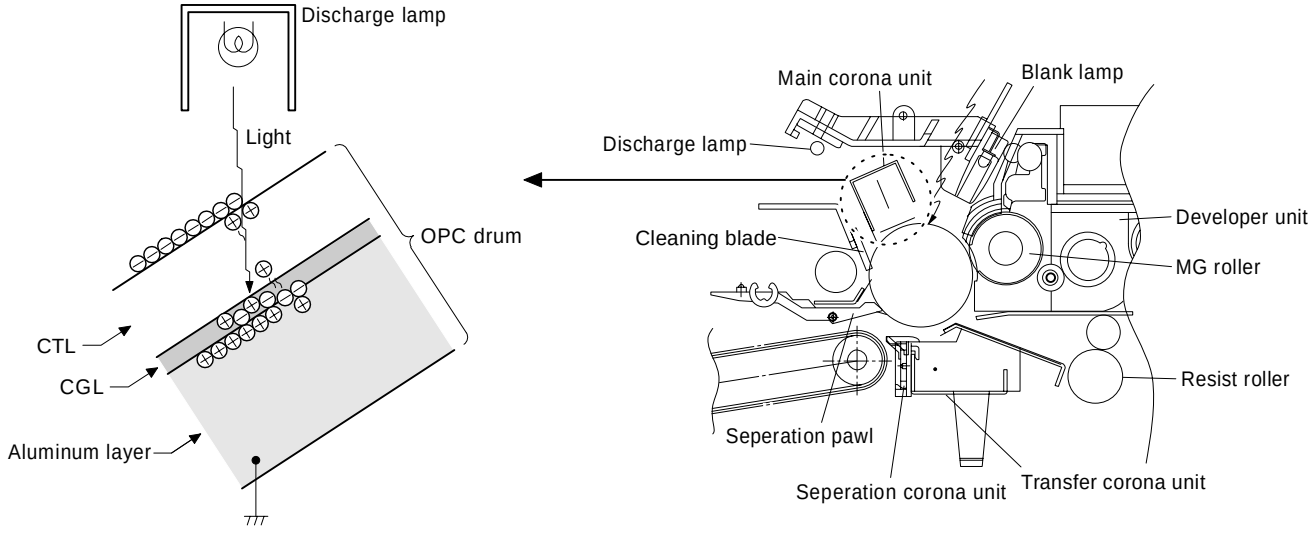

By performing step 1 (Charging) and step 2 (Discharging), the photoconductor itself is initialized to stabilize the drum surface potential.

Step 3 (Main Charging)

By negative discharging of the main charger, uniform negative charges are applied to the OPC drum surface.
The OPC drum surface potential is controlled by the screen grid voltage to maintain the grid voltage at a constant level.

- When the drum surface potential is lower than the grid voltage, electric charges generated by discharging of the charger go through the screen grid to charge the drum surface potential until it becomes equal to the grid voltage.
- When the drum surface potential virtually reaches the grid potential level, electric charges generated by discharging of the charger flows through the electrode of the screen grid to the high voltage unit grid voltage output circuit, thus always maintaining the drum surface potential at a level virtually equal to the grid voltage.
- The main corona unit employs the scorotron system to charge the photoconductor surface to a certain level uniformly.
  In addition, the conventional corona wire is replaced with the corona charging mechanism by saw-teeth plate (stainless steel plate of 0.1 mm thick). In corona discharge, oxygen molecules in the air are ionized to generate ozone (O_3). The mechanism restrict the generation of ozone.

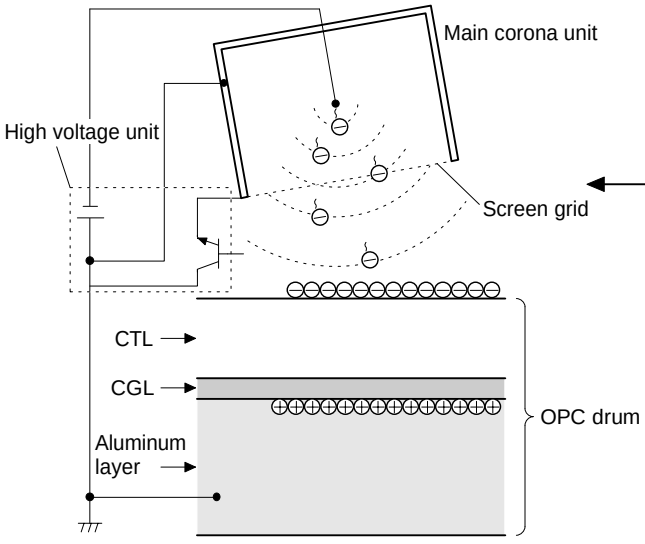

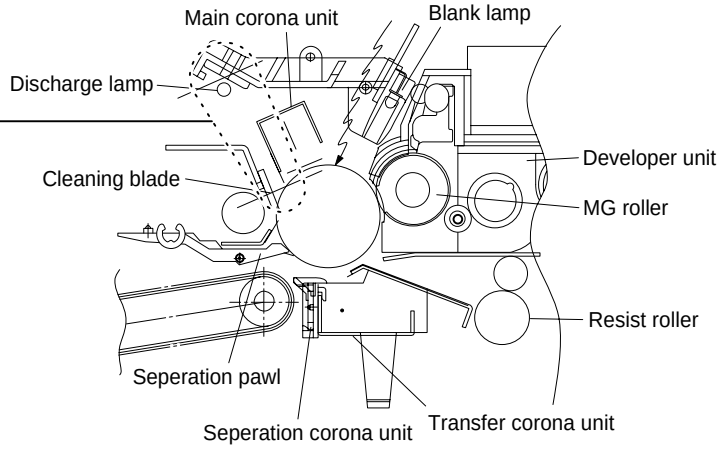

Step 4 (Exposure)

Light from the copy lamp is radiated on the document, and the optical image of the document is reflected by the mirrors and projected through the lens to the OPC drum.
The lighter portion of the document reflects more light (high intensity) to the OPC drum, and the darker portion of the document reflect less light (low intensity) to the OPC drum. Positive or negative charges are generated in the CGL of the OPC drum where lights are radiated.
Negative charges generated in the CGL move towards the positive charges in the aluminum layer generated in step 3. While the positive charges in the CGL move towards the negative charges on the CPU drum surface generated in step 3. Therefore, positive charges and negative charges are neutralized in the aluminum layer and the OPC drum surface at the light radiating position, decreasing the OPC drum surface potential. The CGL electric charge generating amount increases in proportion to the document density, that is, reflected light intensity (the OPC drum surface intensity). Therefore, electric charges are generated less in the CGL layer corresponding to the lighter density of document (higher intensity of the OPC drum surface), and a greater quantity of the negative charges on the OPC drum surface is neutralized, decreasing the OPC drum surface potential more.

On the contrary, electric charges are generated more in the CGL layer corresponding to the darker density of document (lower intensity of the OPC drum surface), and less quantity of the negative charges on the CPU drum surface is neutralized, decreasing the OPC drum surface less. Therefore, the OPC drum surface potential corresponding to the lighter portion of the document is lower, and that corresponding to the darker portion of the document is higher. Latent static-electricity images are formed in the above manner.

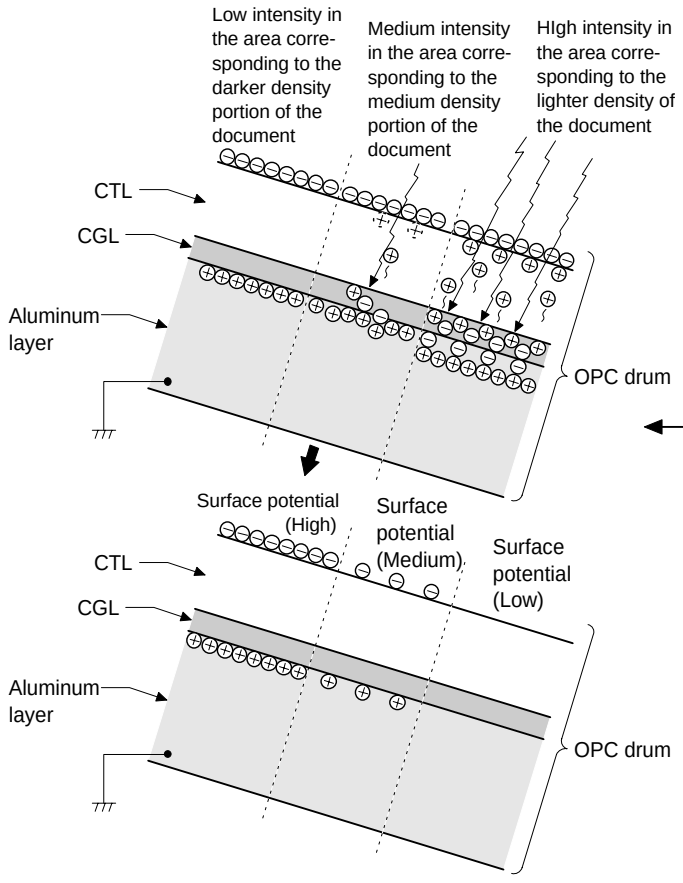

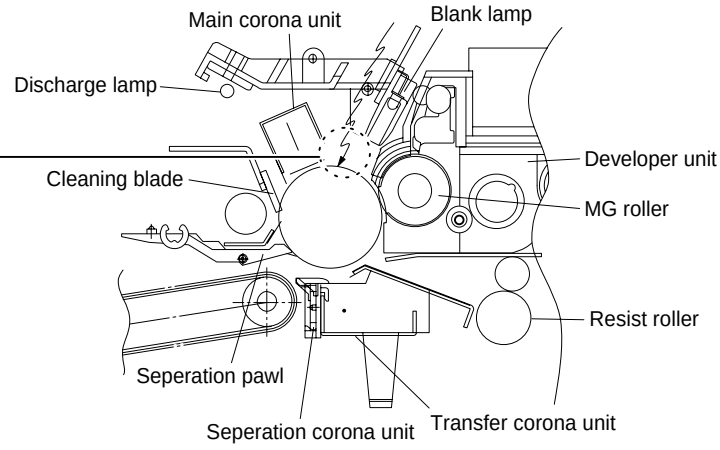

Step 5 (Development)

Toner is attached to the latent static-electricity images on the drum surface to change them to visible images. The two-component magnetic brush development system charges toner positively by friction with carriers, and toner is attached to negative charges on the drum surface. The potential in the darker document projecting area (low intensity) is high (much negative charges) and attracts more toner. The potential in the lighter document projecting portion (high intensity) is low (less negative charges), and attracts less toner.

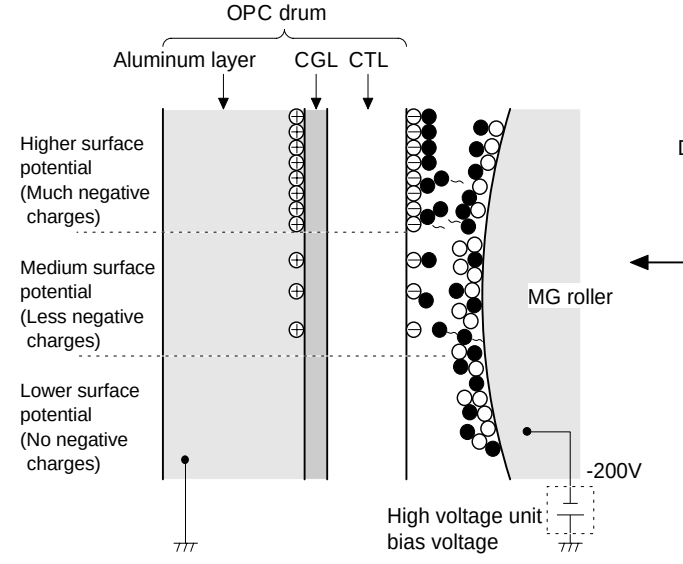

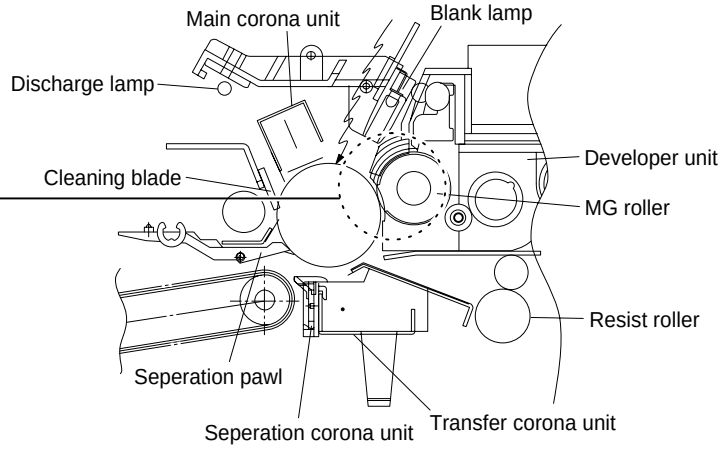

At that time, a bias of –200V is applied to the MG roller (magnet roller), which is provided for preventing toner from being attracted by the residual voltage (about –80V to –100V) in the lighter portion after exposure.

Step 6 (Transfer)

The transfer paper is charged higher than the OPC drum surface potential by strong negative discharge of the transfer charger, making the binding force between the transfer paper and toner stronger than that between the drum and toner, attracting toner to the transfer paper.

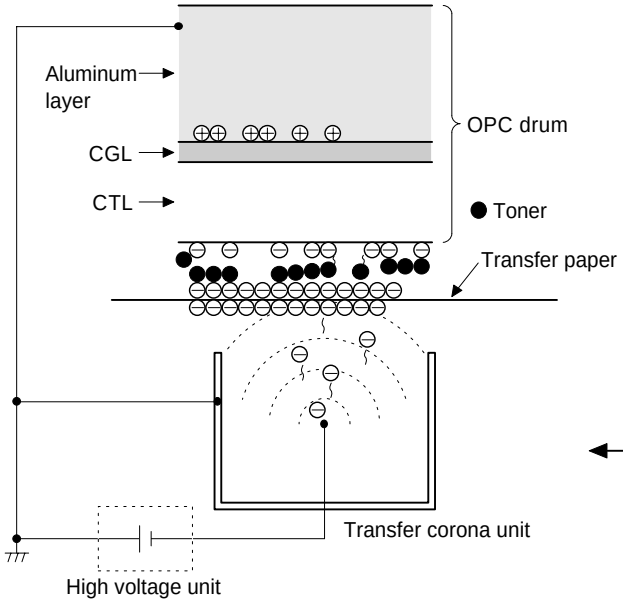

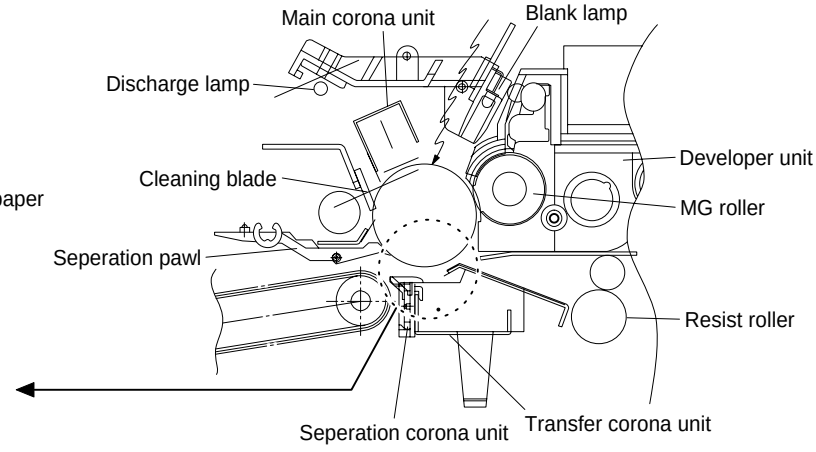

Step 7 (Separation)

After transfer, the copy paper and the drum are negatively charged. Since, however, the negative potential of the copy paper is higher than that of the drum, a attraction force is applied between the drum and the copy paper. To avoid this, AC corona is applied to the copy paper by the separation charger to decrease the copy paper potential to the same level as the drum surface potential. The attraction between the copy paper and the drum is weakened by this, allowing separation of the copy paper by its own extending force. If the copy paper is not separated by the separation charger, it is separated by the separation pawl mechanically.

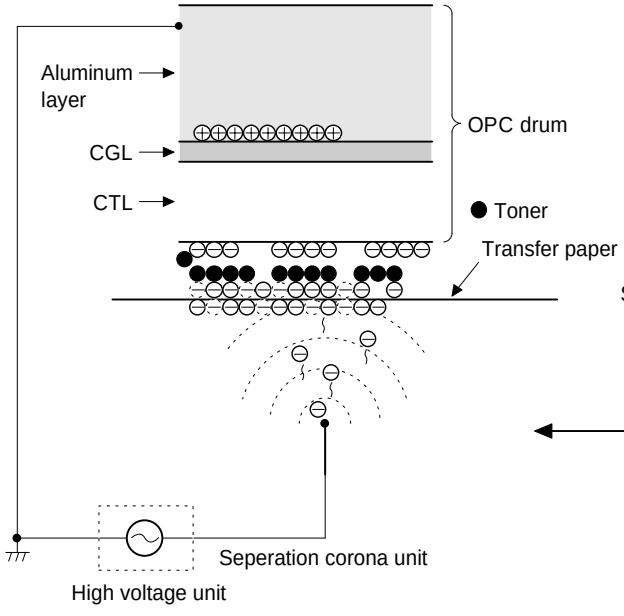

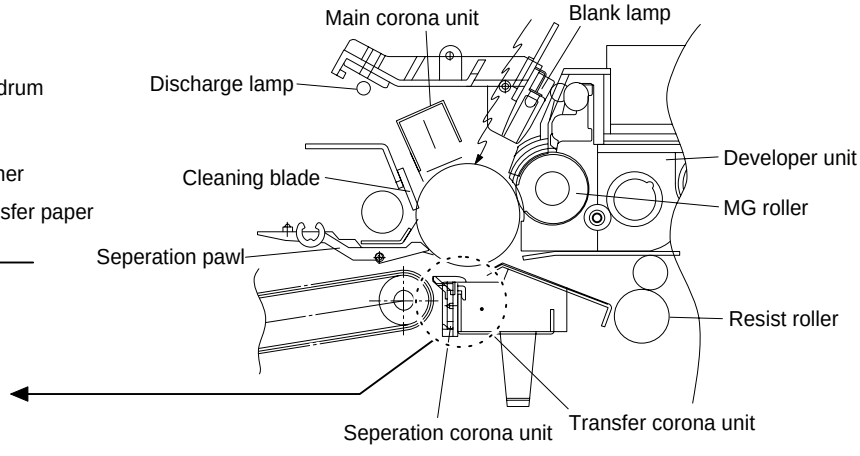

Step 8 (Cleaning)

Residual toner on the drum is removed by the cleaning blade. The removed toner is sent to the waste toner container by the waste toner transport screw.

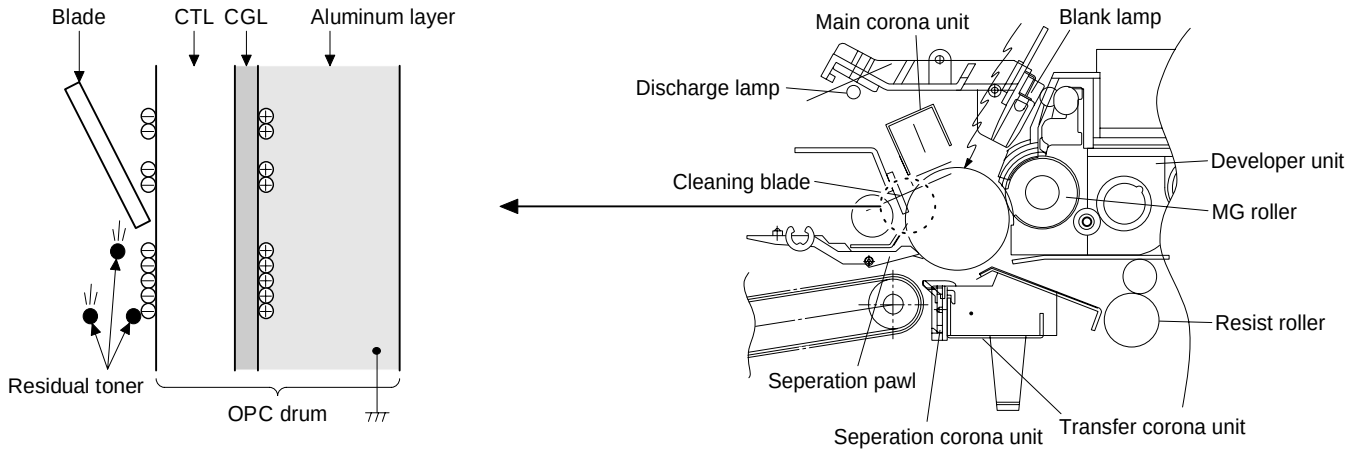

Step 9 (Discharging)

When the OPC drum is exposed to the discharge lamp light, positive and negative charges are generated in the OPC drum CGL. The negative charges generated in the CGL move towards the residual positive charges in the aluminum layer, while the positive charges in the CGL move towards the residual negative charges on the OPC drum surface. Therefore, the positive and the negative charges are neutralized in the aluminum layer and on the OPC drum surface, removing the residual charges on the OPC drum surface. As a result, the OPC drum surface potential becomes 20V ~ 30V.

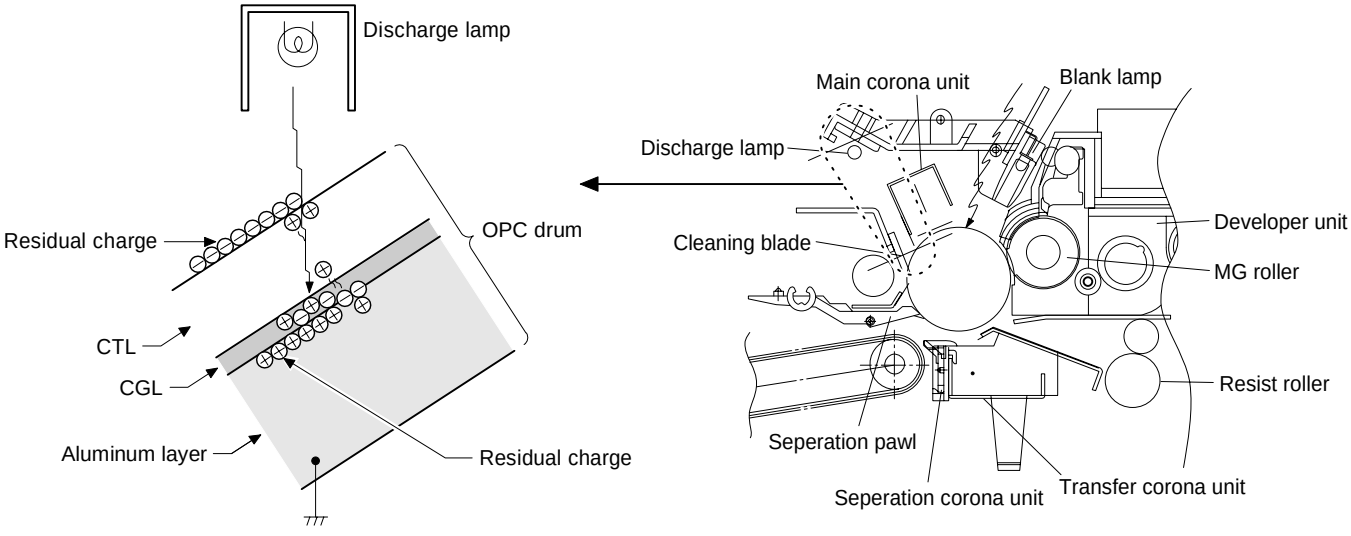

(4) Transit of photoconductor drum surface potential

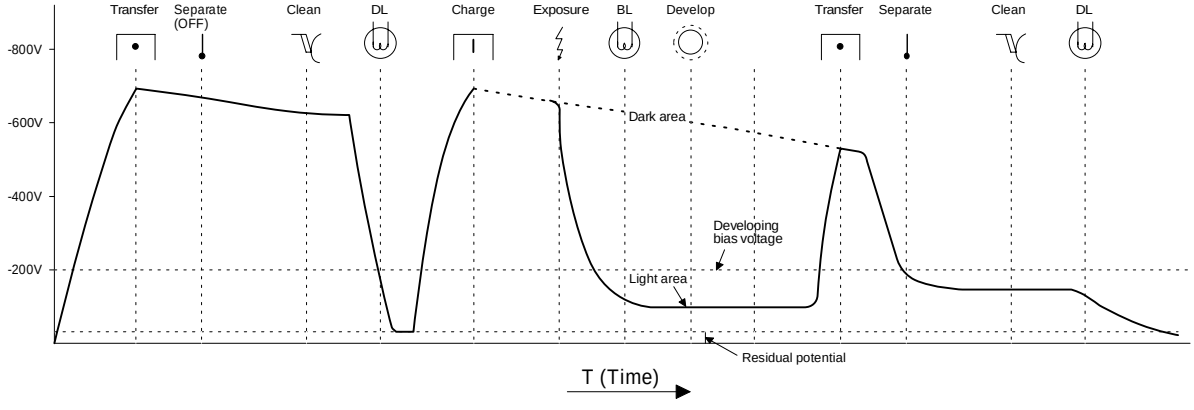

(5) Process correction system

1) Outline of the correction system

This model is provided with the correction system for the optical unit and the photoconductor drum unit. The combination of the two correction systems provides stable clear copy.
These functions are to maintain the copy quality for a long time and to correct the characteristics of the parts, and are controlled by the software and invisible from the outside.

2) Correction operation

1. Photoconductor drum unit correction (Photoconductor drum sensitivity correction)

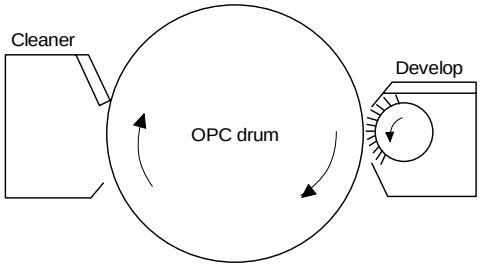

Fig. 1

Change the tickness of the carrier transport layer (CTL).
By the developper.
By the cleaner blade.

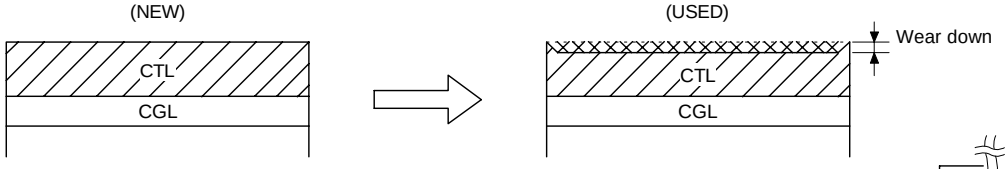

Fig. 2

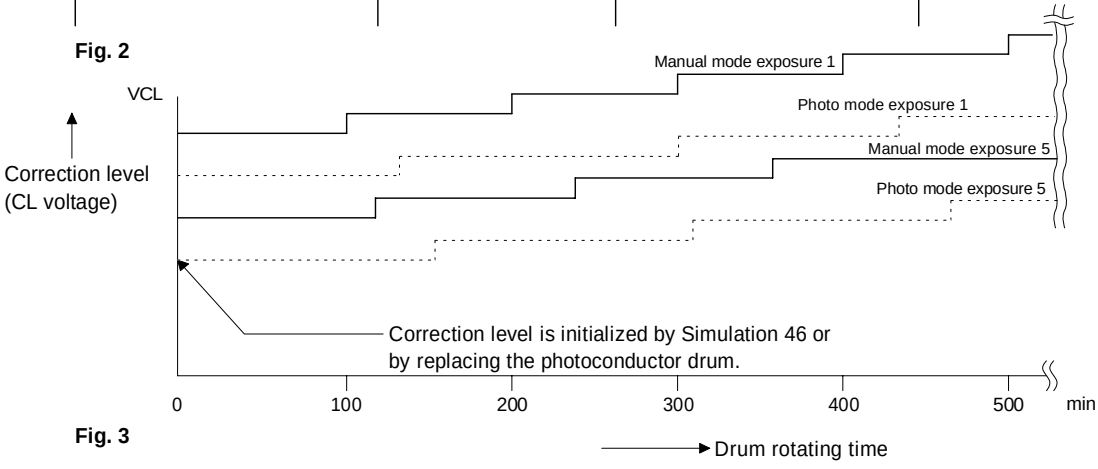

Fig. 3

The photoconductor drum is subject to mechanical stress by the cleaning blade, resulting in wear in the OPC layer. In addition to that, the photoconductor drum receives optical stress from the copy lamp. These stresses reduce the photo sensitivity of the photoconductor drum, producing unnecessary dirt copy. This trouble is removed by adjusting the copy lamp voltage. For this model, however, to reduce the number of service calls, the copy lamp voltage is automatically dropped according to the reduction in the photo sensitivity of the photoconductor drum to correct it.

The drum rotating time from installation of a new photoconductor drum is counted by the timer and the copy lamp voltage is corrected in every mode. (Refer to Fig. 3.)
The correction is performed within the range of the max. supply voltage of the copy lamp. (The rotating time of the photoconductor drum can be checked with Simulation 44-4.)

⁎ The correction level is initialized by Simulation 46 or by replacing the photoconductor drum.

⁎ Replace the OPC drum for every 40K copies. After replacement, be sure to reset the drum count value to "0" with SIM 24-7.
The replacement timing of the OPC drum is indicated by lighting the OPC drum replacement lamp. The copy count of the OPC drum can be checked with SIM 22-12.

2. Optical unit correction (Dirt correction)

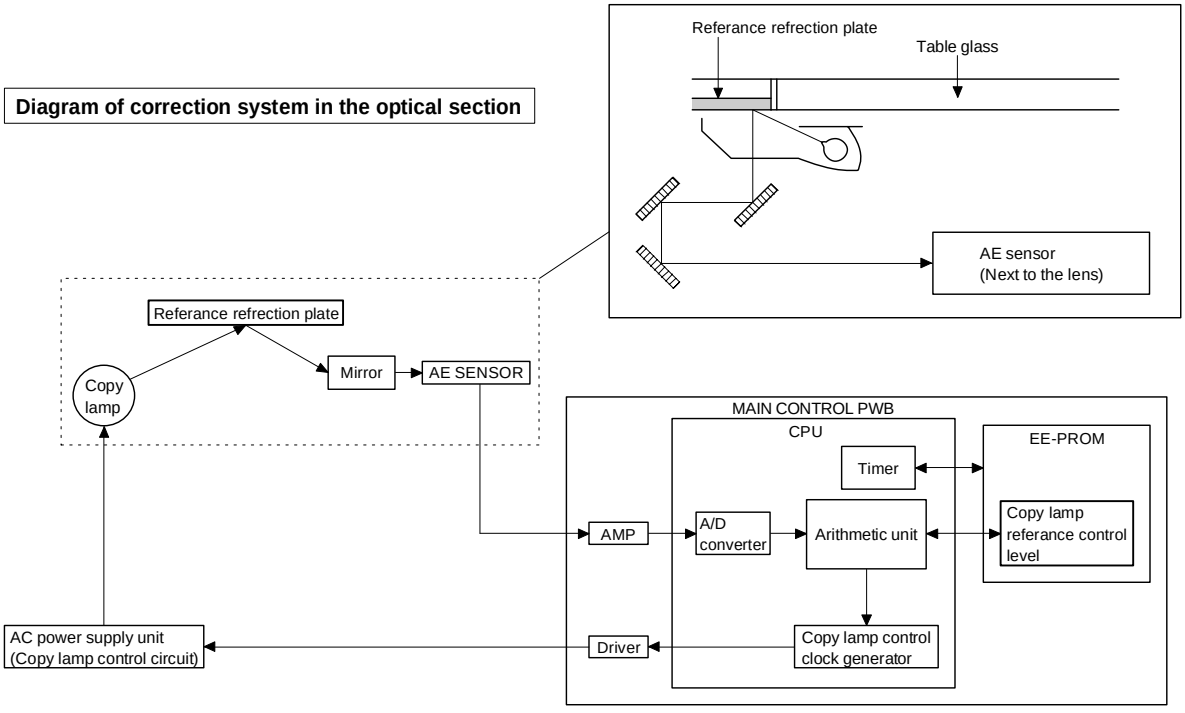

The purpose of this correction is to maintain the copy density even though the optical unit is contaminated and to reduce troublesome cleaning of the optical unit.
When the lamp, the mirror, and the reflector are dirtied with dusts and toner, the light quantity radiated to the photoconductor drum is reduced, increasing the copy density and producing unnecessary background copy.
The above trouble is removed by changing the copy lamp voltage to adjust the copy density. It, however, requires serviceman's operation.
In this model, the AE sensor senses dirt on the copy lamp, the mirror, and the reflector, and the copy lamp light quantity is changed according to the dirt level to reduce the change in the copy density due to the optical unit dirt.
When the optical parts are dirtied, the reflection rate is reduced to reduce the quantity of light which is passed to the optical dirt sensor. In this manner the dirt level is sensed.

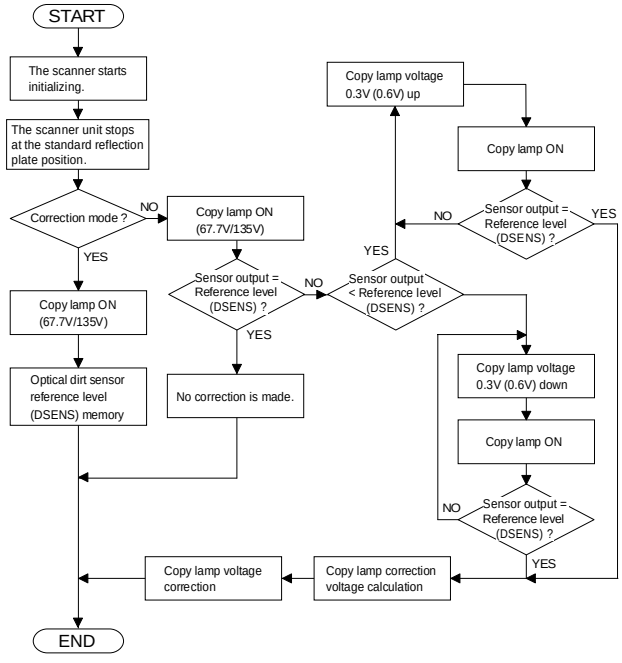

[Initial setting]

After making a copy by Simulation 46, the scanner unit stops at the position of the standard reflection plate on the back of the document stopper to light the copy lamp at a certain level, and the AE sensor output level at that time is recorded as the reference value. (The reference value can be checked with Simulation 44-2.)

[Correction timing]

The correction is performed after the copy cycle after turning on the power, or after the specified time of rotation of the photoconductor drum.

[Correction operation]

The same operation as the initializing is performed to change the copy lamp voltage until the AE sensor output level reaches the same level as the reference value, performing the correction.
The copy lamp voltage is revised to a new value at every correction, and the new value will be used in the next correction.
(The correction voltage value can be checked with Simulation 44-3.)

[Correction timing]

- When the power is turned on.
- Once for every 155 min. of drum rotation.

[6] DISASSEMBLY AND ASSEMBLY

The descriptions of this chapter are divided into the following sections:

1. Paper feed section, paper transport section, power section
2. Manual paper feed section
3. Fuser section
4. Optical system
5. Drum section
6. Developer section
7. Operation panel/medium cabinet
8. Major parts in the frame side

1. Paper feed section, paper transport section, power section

1-1. Paper feed unit

① Open the front cover and open the body. Release the right and the left lock levers and pull out the manual paper feed unit.

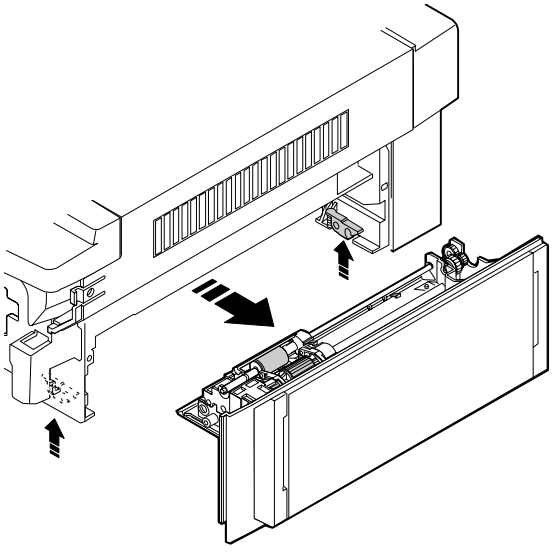

② Disconnect the CN-B connector of the lower PWB, remove the paper feed unit fixing screws (4 pcs.), and lift the paper feed unit to remove.

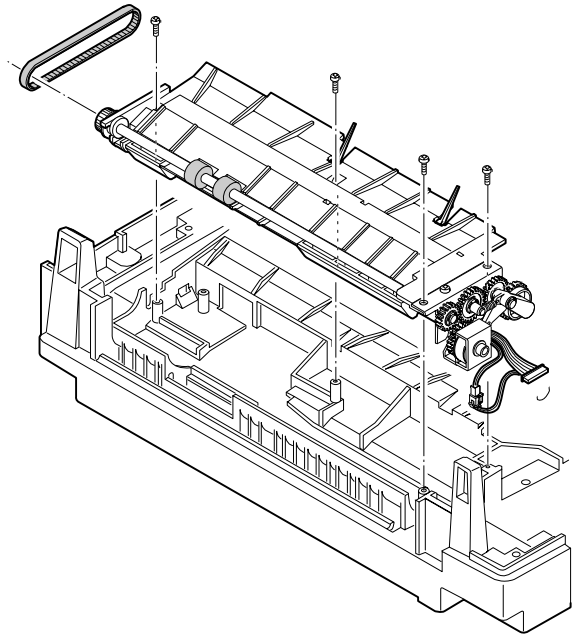

1-2. Paper feed roller ass'y removal

① Disconnect the connector of the magnetic clutch in the rear frame side.

② Remove the hook section of the paper feed roller bearing in the front frame side by using a screwdriver.

③ Remove the roller release arm spring from the paper feed frame.

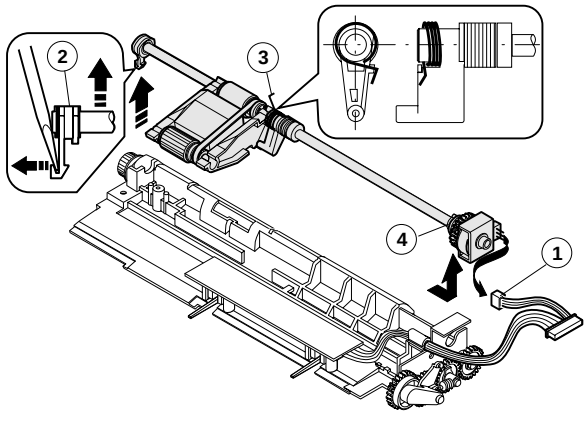

④ Remove the bearing in the rear frame and remove the paper feed roller ass'y.

Note for assembly (1): Hang the roller release arm spring on the spring hook of the roller release arm. Attach the paper feed roller ass'y to the paper feed unit, and hang the spring on the paper feed frame.

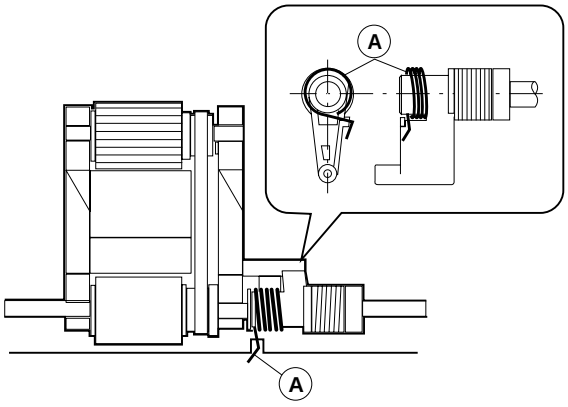

Note for assembly (2): Attach the paper feed roller ass'y so that the paper feed roller clutch faces the lower frame.
When attaching the paper feed unit, insert it in the base unit hole of the copier.

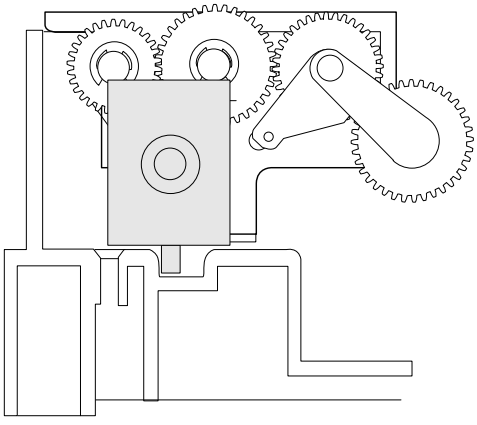

1-3. Separation roller

① Remove the paper feed unit and remove the separation roller.

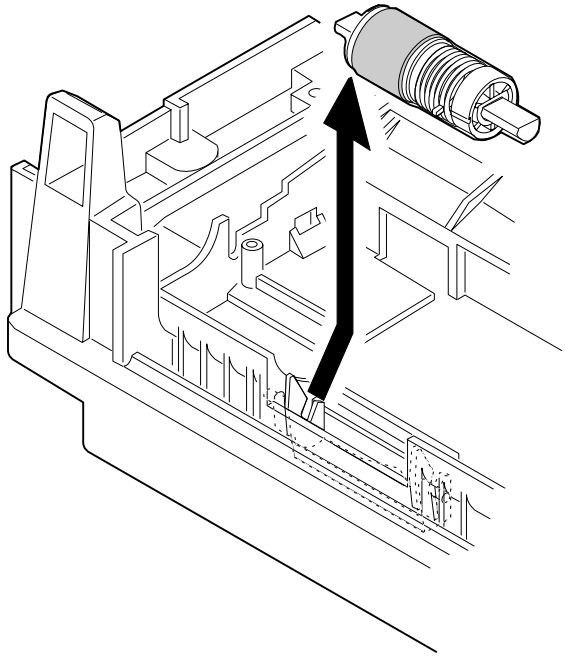

1-4. Takeup roller, paper feed roller

① Remove the paper feed roller ass'y, and remove the takeup roller.

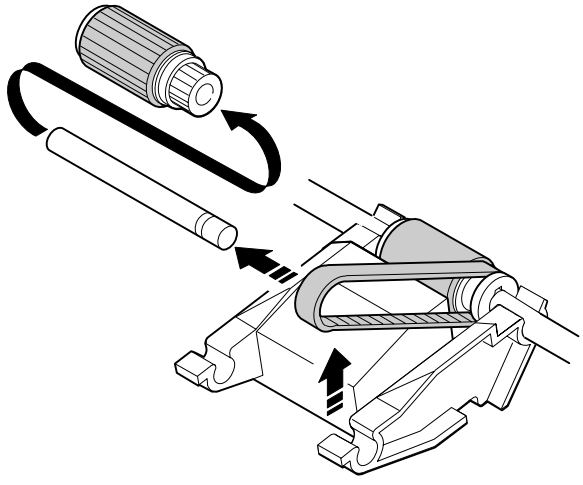

② Remove the roller holder, the stop ring, and the bearing, then remove the paper feed roller.

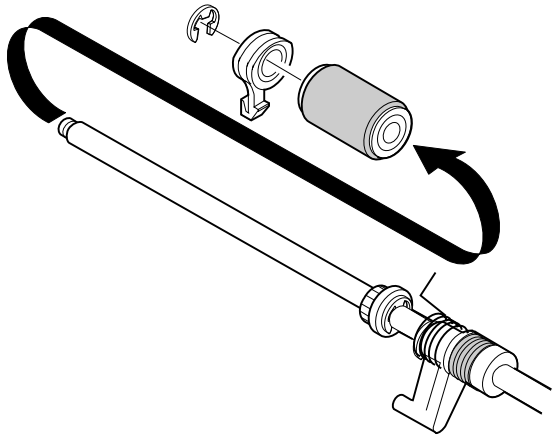

Note for assembly (1): Attach the paper feed roller so that the one-way clutch in the rear frame side. (Be careful to the installing direction.)
Attach the roller holder as shown below:

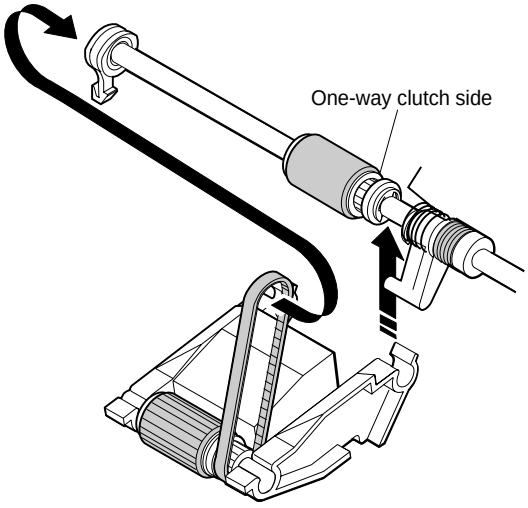

1-5. Resist roller

① Insert a screwdriver into the front frame hole to release the lock pawl, and remove the TC case.

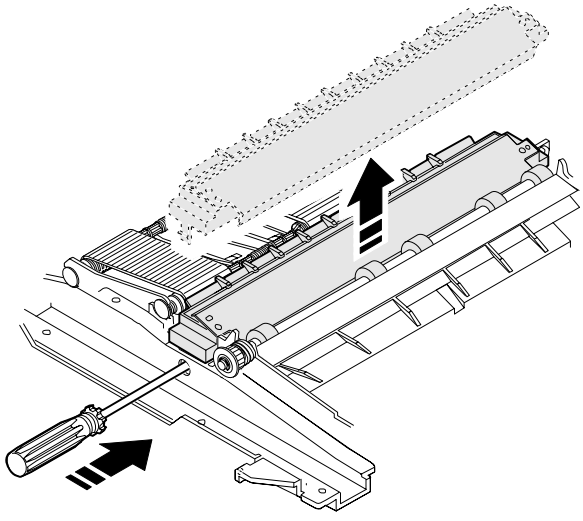

② Disengage the hook section of the bearing in the front frame side, lift it upward and remove towards the upper frame side. Remove the spring in the rear frame side. Disconnect the CN-E connector in the lower frame PWB unit. Slide the resist roller ass'y to the rear frame side and remove it upwards.

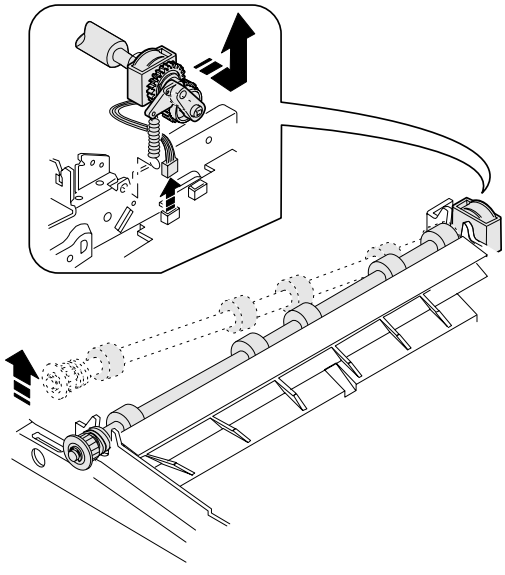

③ Remove the clutch, and the gear as shown below:

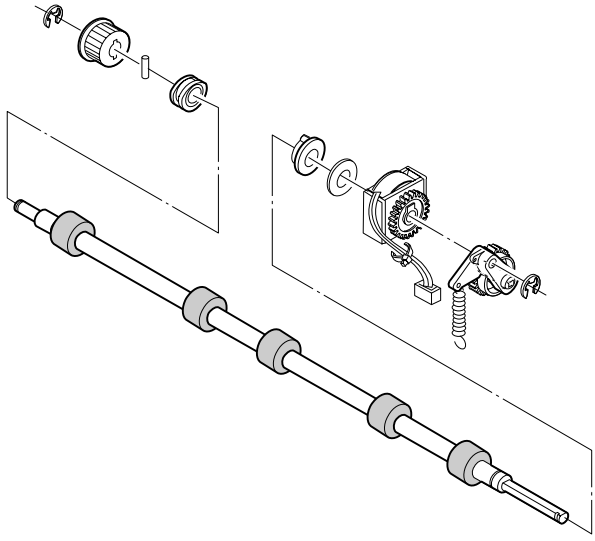

Note for assembly (1): When assembling, attach the positioning pin of the resist roller clutch in the direction of paper exit.

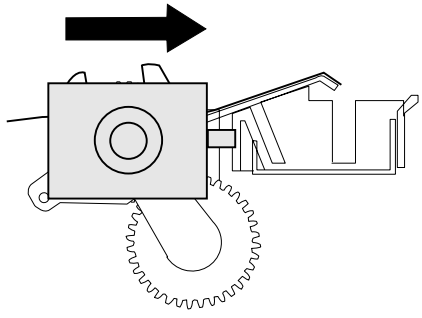

Note for assembly (2): When assembling the resist roller ass'y to the copier, attach it over the PS roller lower mylar and rotate the mylar and return the mylar to the original position. (To prevent deformation of the mylar)

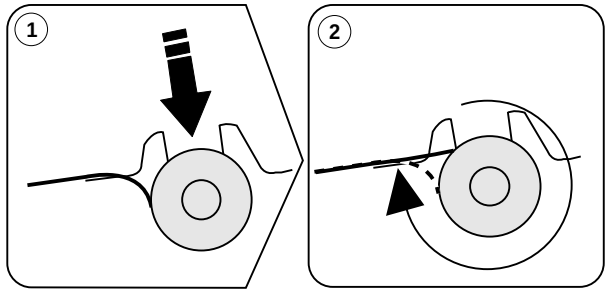

1-6. Transport belt

① Remove the fuser unit.

② Remove the TC case.

③ Remove the transport belt drive shaft in the TC case from the holder, and remove the drive shaft in the paper exit side, and remove the belt.

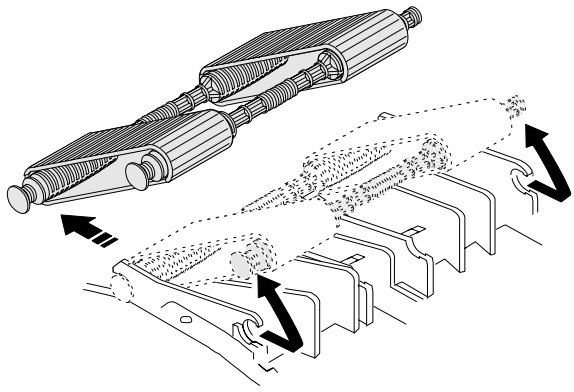

1-7. Socket holder unit

① Remove the CN-C connector of the lower unit PWB, the grounding wire, and the red high voltage lead wire (for separation electrode) which in the socket holder.

② Remove the two fixing screws in the paper feed side, remove the pawl from the positioning hole in the paper exit side, and slide it in the direction of paper feed to remove.

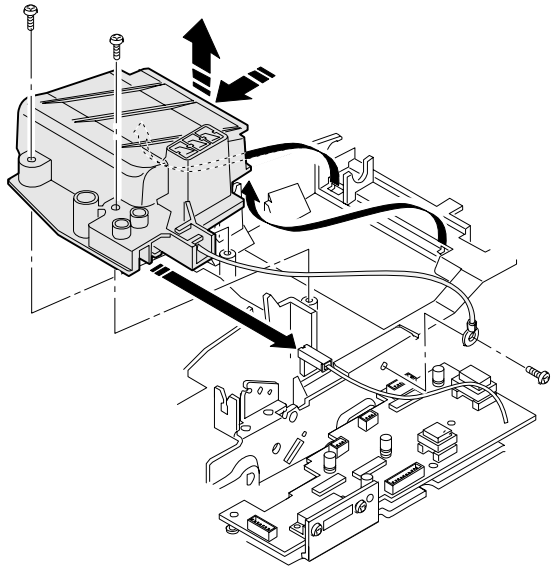

1-8. Lower unit PWB

① Open the body up, and remove the rear lower cabinet.

② Remove the connector, the PWB fixing screw (1 pc.), and the CN-F fixing screws (2 pcs.). Slide the lower unit PWB to the front frame side and remove it upwards.

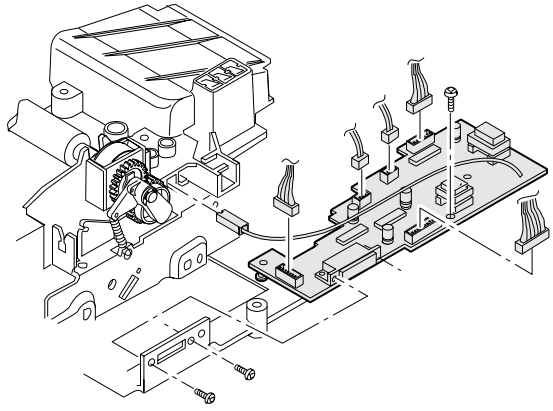

1-9. Cassette paper empty detector (CPED1)

① Remove the rear lower cabinet.

② Remove the fixing screw and the CN-D connector, and remove CPED1.

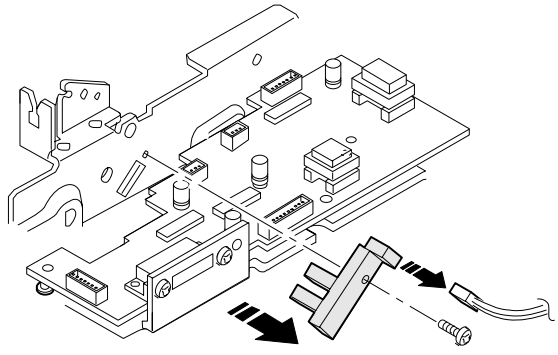

1-10. Power unit

① Remove the upper and the lower cabinets in the rear side.

② Remove 12 connectors, two fixing screws, and the grounding wire. Lift the power unit to remove it upwards.

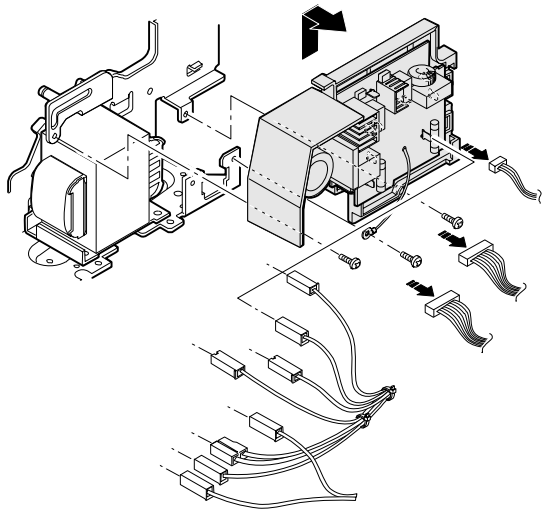

Note for assembly (1): When attaching the harness, be careful to the connector color and the lead wire color. (Carefully refer to the indication on the PWB for connection of the harness.)

Example: YE (WH) → Yellow connector and white lead wire
YE = Yellow, WH = White, BK = Black,
GR = Green, BL = Blue

2. Manual paper feed section

2-1. Manual paper feed roller, manual takeup roller

① Remove the manual paper feed unit from the copier.

② Remove the roller auxiliary spring, the manual solenoid connector, the E-rings in the front and the rear frames, and the bearing. Remove the manual roller ass'y together with the solenoid holder.

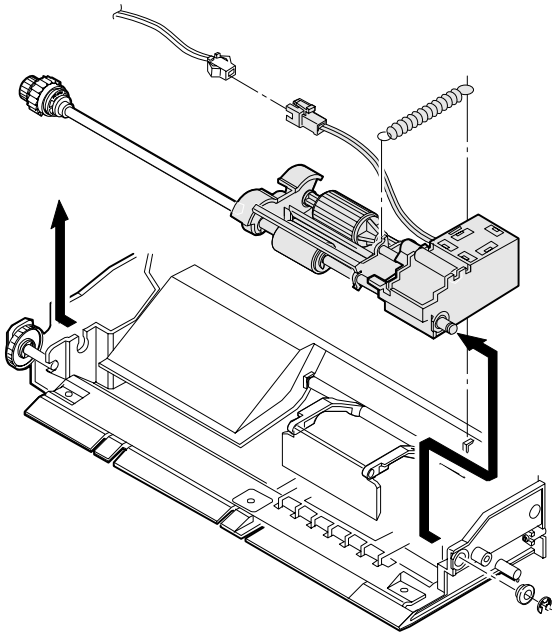

③ Remove the manual feed takeup roller from the manual arm.

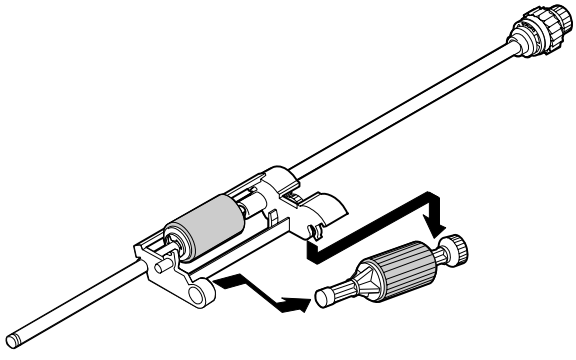

④ Remove the manual arm and the E-ring, and remove the manual paper feed roller.

Note: Gear 20T has a positioning pin. When removing the manual arm, be careful not to miss the positioning pin.

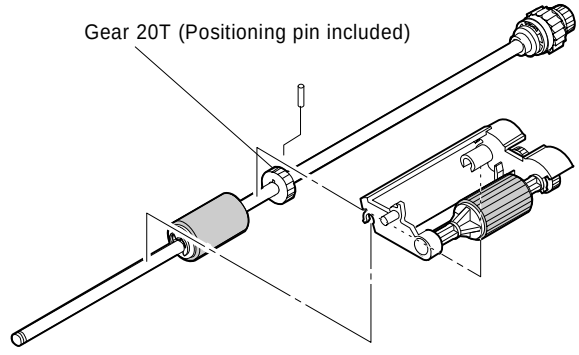

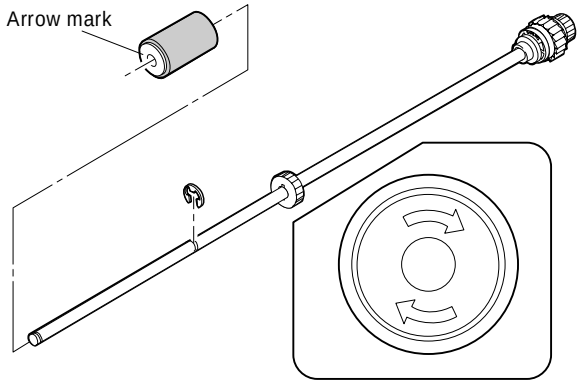

Note for assembly (1): The manual paper feed roller is provided with the one-way clutch. When attaching it, attach so that the arrow mark on the roller is in the E-ring side. (Be careful to the installing direction.)

2-2. Reverse rotation roller ass'y

① Remove the manual feed roller ass'y.

② Remove the reverse roller ass'y from the roller holder.

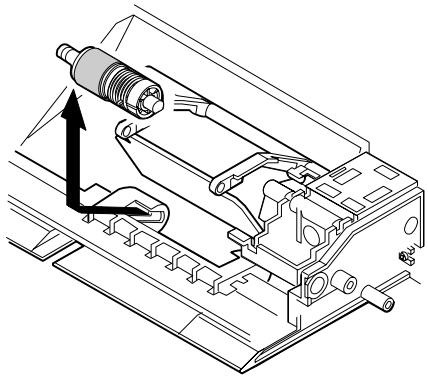

3. Fuser section

3-1. Fuser unit removal

① Open the front panel

② Remove the table glass.

③ Turn the open/close lever to the right and open the upper unit slowly.

④ Remove the connectors (2 pin × 2), slightly lift the right side of the unit and pull it out.

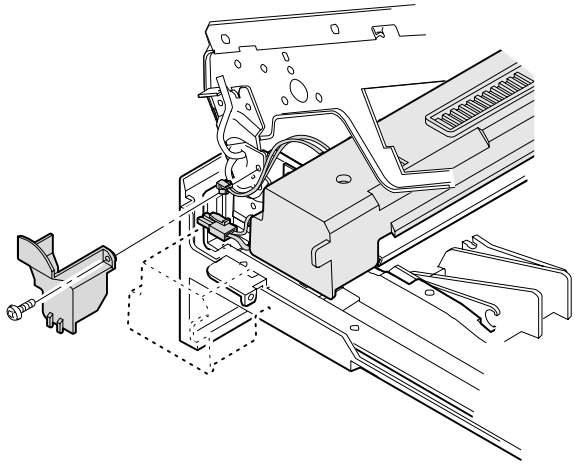

⑤ Move the copy lamp unit to the left of the body (the paper exit side).

⑥ Disconnect the connector (2-pin) of the dehumidifier heater which extends from the dark box cover. Insert a long screwdriver (+) into that port and remove the screw which is fixing the fuser cover.

⑦ Remove the fuser cover in the direction of arrow Ⓐ.

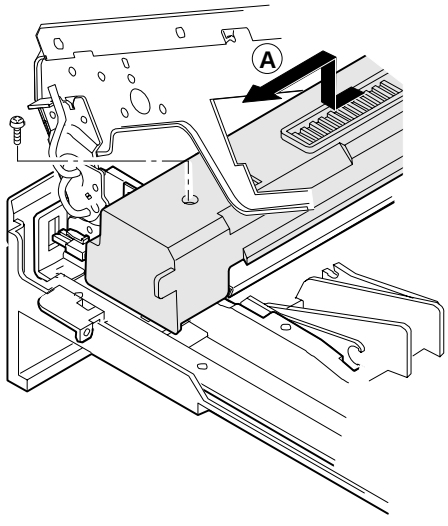

⑧ Remove an E-ring and two connectors.

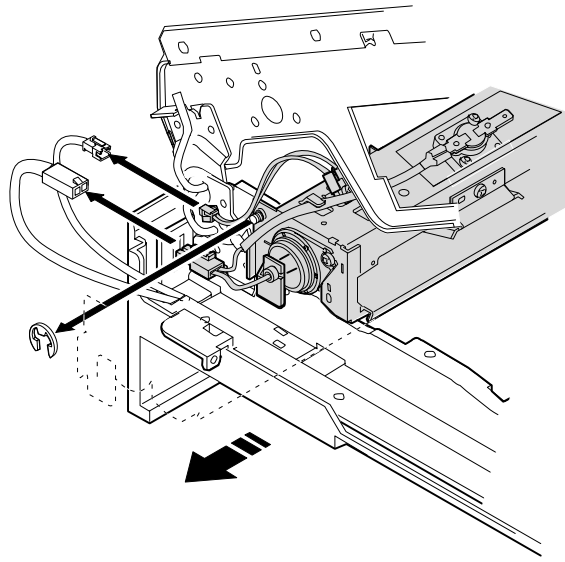

3-2. Heater lamp replacement

① Remove the fuser cover fixing screw (1 pc.), and slide it to the front side, and remove it.

② While pushing the projection of the Faston terminal connected to the thermostat, remove the lead wire from the connected section.

③ Remove the lamp holder fixing screw on the top of the rear frame, and remove the holder.

④ Pull out the heater lamp from the front frame.

For assembly, reverse the disassembly procedures.

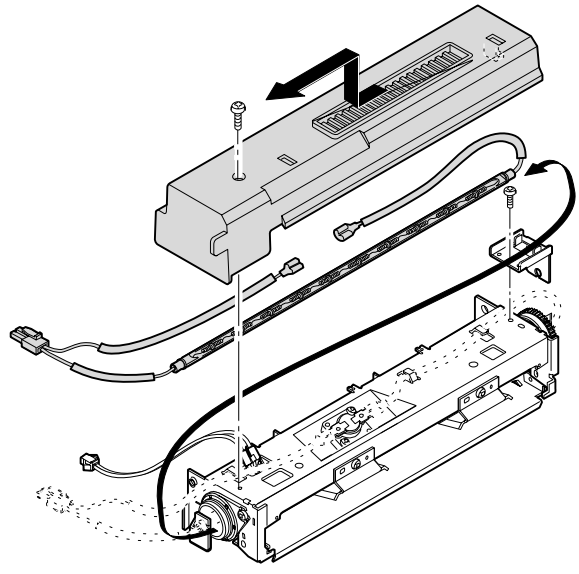

3-3. Upper heat roller ass'y removal

① Remove the bearing fixing screws (2 pcs.) in the front and the rear frames.

② Put the paper guide to the paper exit side and separate the separation pawl from the roller and fix it.

③ Rotate the fixing screw section of the bearing about 45 degrees below and pull it upwards.

For assembly, reverse the disassembly procedures.

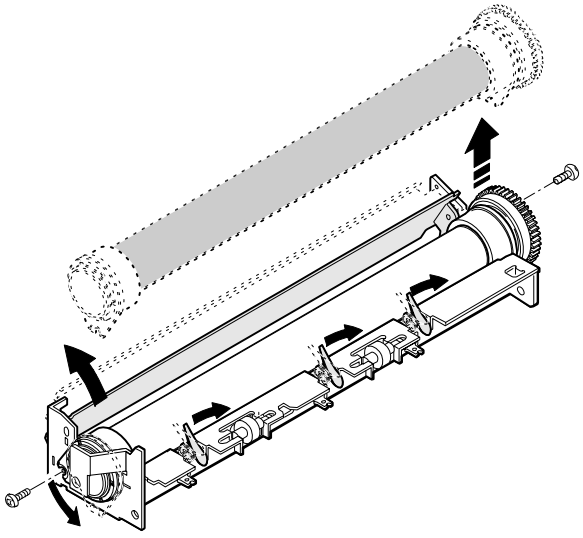

3-4. Upper separation pawl replacement

① Remove the fuser unit and remove the cover.

② Place the fuser unit so that the paper guide is in the lower side. (The separation pawl is in the upper side.)

③ Remove the tension spring, hold the tip of the separation pawl and remove it from the supporting section, and tilt it to remove.

For assembly, reverse the disassembly procedures.

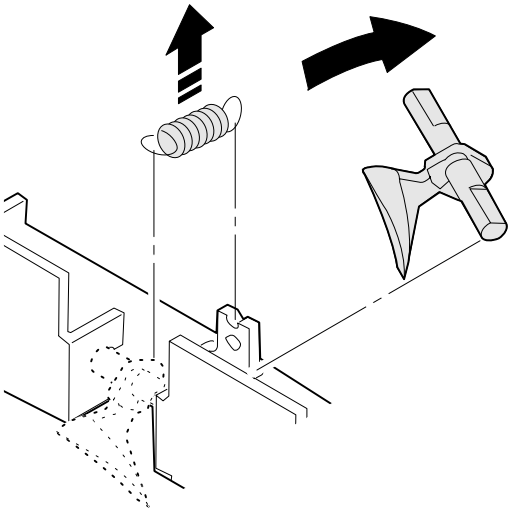

3-5. Lower cleaning roller and lower heat roller replacement

① Remove the fuser unit.

② Remove the CL roller springs (2 pcs.) which is fixing the lower cleaning roller from the hook section.

③ Remove the lower cleaning roller.

④ Lift the paper exit guide, and remove the lower heat roller without making contact between the roller and the scraper.

For assembly. reverse the disassembly procedures.

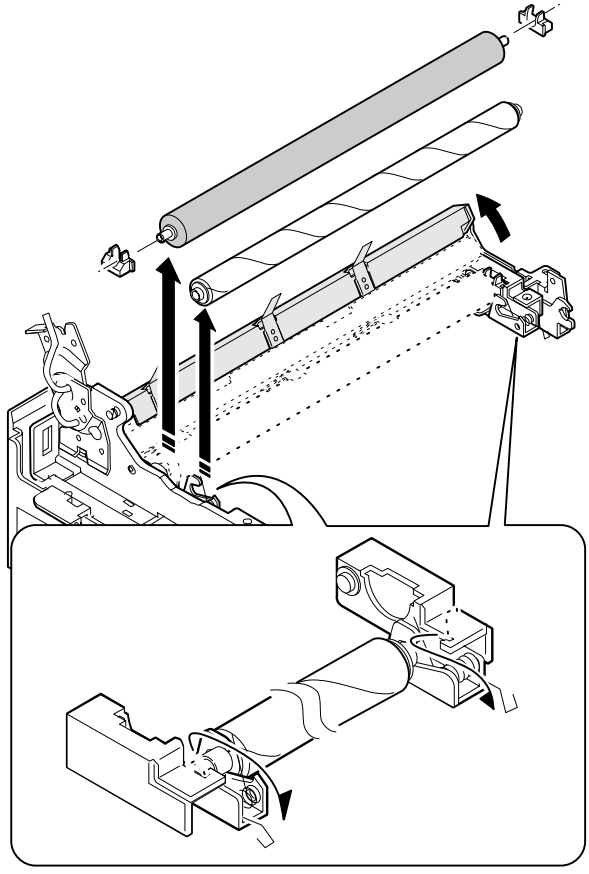

3-6. Scraper replacement

① Remove the upper fuser unit.

② Remove the paper exit paper guide fixing screw (step screw) in the front frame side, and remove the paper exit paper guide.

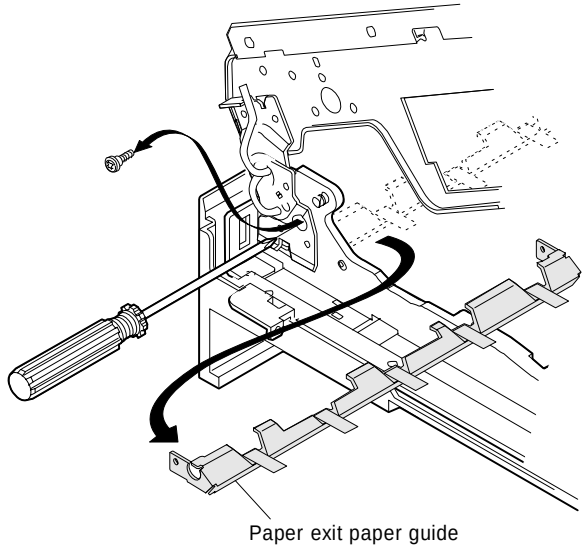

③ Remove the scraper hook section from the paper exit paper guide, and remove the scraper.

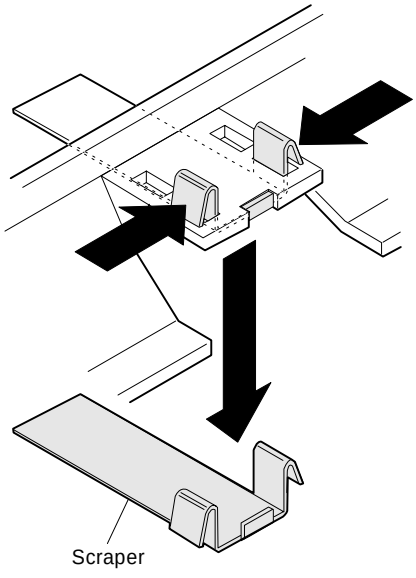

Note: When attaching the scraper, be careful not to deform it. Also be careful to check that the scraper hook section is completely inserted into the paper exit paper guide.

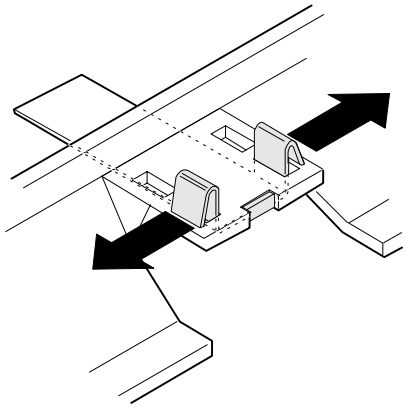

3-7. Thermistor/thermostat removal

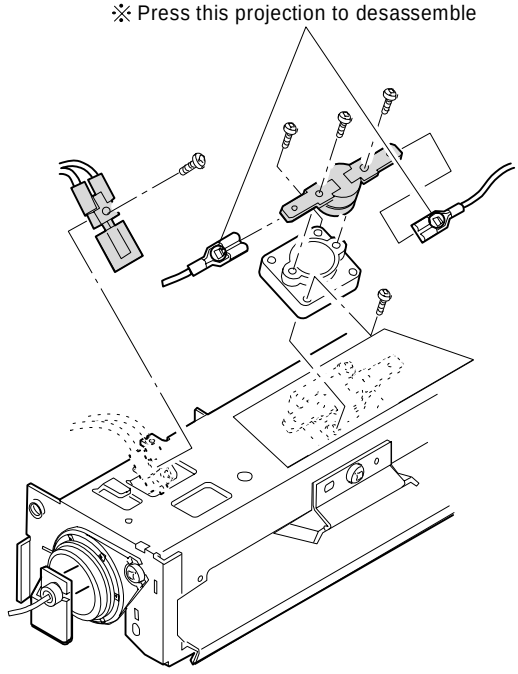

✳ Note for assembly

- Be sure to bring the thermistor center into contact with the heat roller.
- Clean and remove foreign materials from the thermistor surface with alcohol.

4. Optical system

4-1. Copy lamp replacement

① Open the body up. Release the lock lever of the manual paper feed unit and remove the manual paper feed unit.

② Remove the fixing screws (2 pcs.) in the right upper cabinet, and remove the right upper cabinet.

③ Remove the fixing screws (4 pcs.) of the glass holder, and remove the glass holder.

④ Remove the table glass.

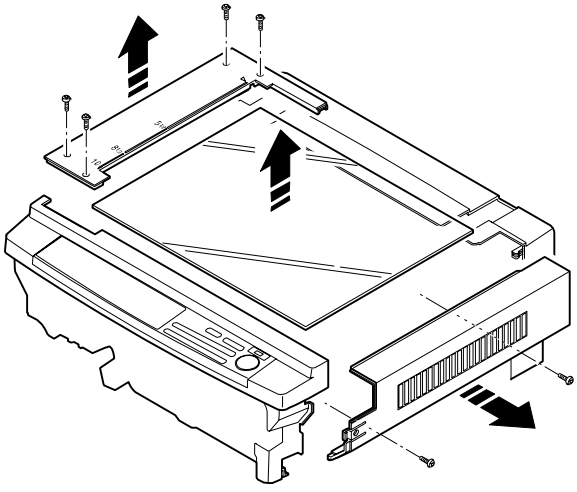

⑤ While pushing the copy lamp electrode in the rear frame, remove the copy lamp.

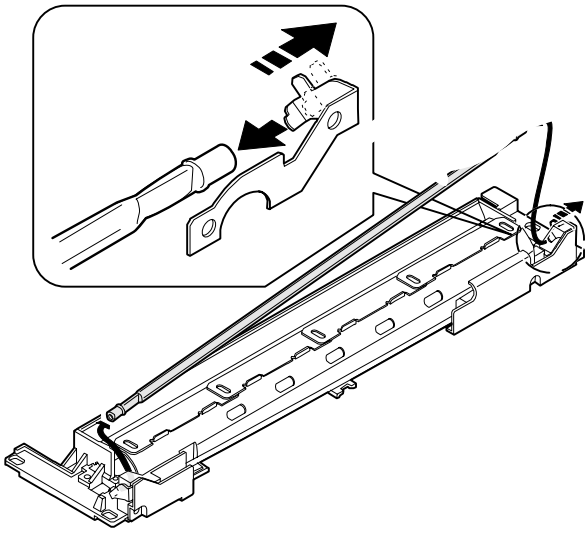

For assembly, reverse the disassembly procedure.

Note: Be careful to the direction of the copy lamp installation.

4-2. Copy lamp unit replacement

① Remove the manual paper feed unit, the right upper cabinet, the glass holder, the table glass, and the operation panel.

② Move the copy lamp unit to the frame notch (refer to the figure).

③ Remove the terminal section of the copy lamp lead wire. (One screw and insertion terminal)

④ Loosen the fixing screw of the front and the rear frame wire, fixing plate and remove the wire from the copy lamp unit.

⑤ Slide the whole unit forward, and remove the rear frame side upwards.

For assembly, reverse the disassembly procedures.

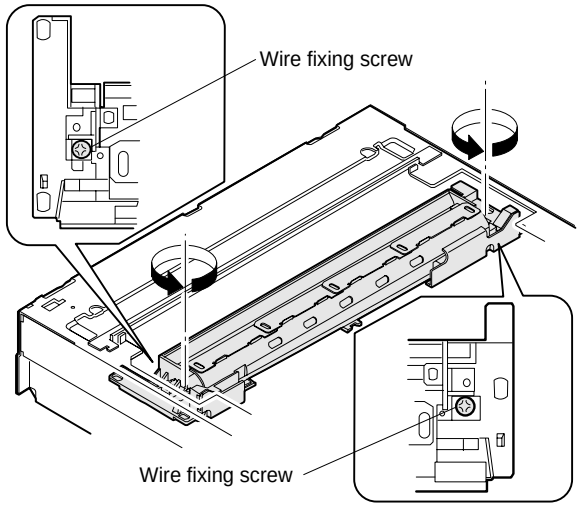

Note: When the copy lamp unit is removed, the position adjustment must be required when attaching again. Refer to the adjustment item for the work.

4-3. Mirror base drive wire replacement

<Removal>

① Remove the manual paper feed unit, the right upper cabinet, the glass holder, the table glass and the operation panel.

② Remove the fixing screws (2 pcs.) of the left upper cabinet, and slide to the rear frame side to remove the cabinet.

③ Loosen the fixing screw of the copy lamp unit wire fixing plate, and remove the wire from the unit.

④ Remove the tension spring (⑦ in the figure) of the mirror base drive wire in the paper exit side from the hook section.

⑤ Slightly shift the mirror base to the paper feed side, and remove the terminal ① of the mirror base drive wire.

⑥ Remove the wire fixing screw of the drive pulley.

<Installation>

① Set the mirror base to the positioning plate position.

② Set the terminal side of the mirror base drive wire on the hook section ①, turn the mirror base pulley ② outside to wind the wire around the drive pulley from the above.

③ Wind the wire 8 turns from the outside to the inside of the drive pulley, and put the 7th turn into the groove, and fix it with a screw temporarily.

④ Pass the wire under the mirror base and wind around the paper exit pulley (the larger one).

⑤ Pass the wire to the inside of the mirror base pulley, and pass through the paper exit pulley (the smaller one), then fix the tension spring to the hook section ⑦.

⑥ Check that the mirror base is in contact with the positioning plate, and tighten the wire fixing screw of the drive pulley.

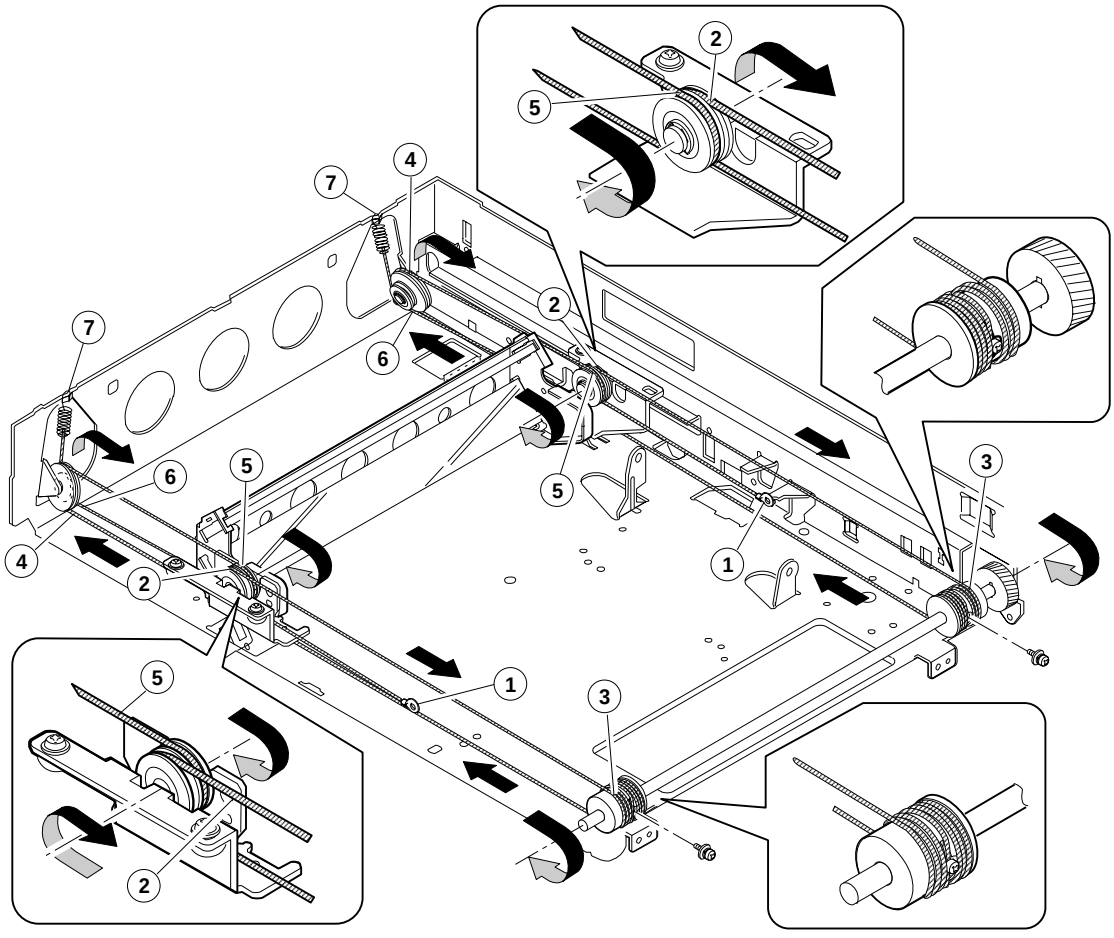

Note: After replacement of the mirror base drive wire, perform the vertical skew copy adjustment, the focus adjustment, and the horizontal skew copy adjustment.

4-4. Lens and lens drive wire replacement

<Removal>

① Remove the manual paper feed unit, the right upper cabinet, and the table glass.

② Remove the dark box cover fixing screw (1 pc.) and the cover.

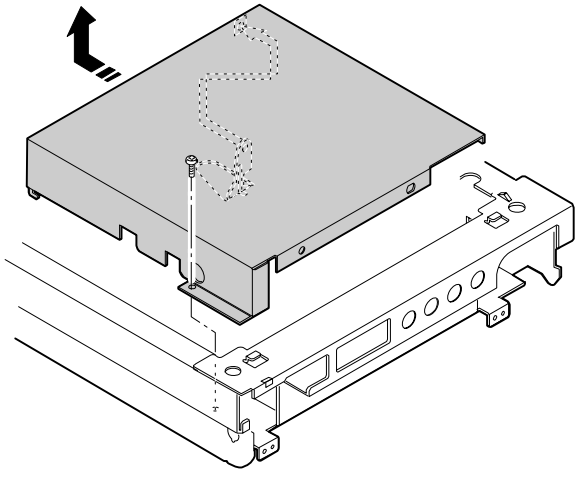

③ Shift the lens carriage unit to the paper feed side.

④ Remove the tension spring of the lens drive wire from the hook section, and remove the wire.

⑤ Remove the shaft mounting plate in the paper feed side, and remove the shaft and the carriage unit.

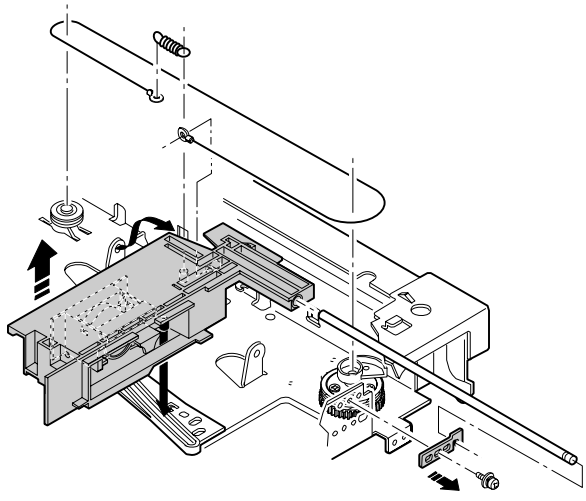

<Installation>

① Pass the lens drive shaft through the carriage unit, and set the shaft to the shaft support section of the base plate.

② Fix the shaft mounting plate in the paper feed side.

③ Store the lens unit projection in the lens guide rail.

④ Set the lens drive wire on the carriage unit.

⑤ Align the No.4/5 mirror zoom cam and the carriage unit to the normal copy position

⑥ Manually hold and fix the carriage unit, and wind the wire around the drive gear.

⑦ Wind the wire around the pulley, pull it slightly and attach the spring to it, and set the spring on the hook section.

Note: When the lens unit is removed, the right angle adjustment, the magnification ratio adjustment, and the focus adjustment are required.

Note: When the lens drive wire is removed, the magnification adjustment and the focus adjustment are required.

4-5. No. 4/5 mirror unit and peripheral parts replacement

① Remove the manual paper fed unit, the right upper cabinet, and the table glass.

② Remove the dark box cover fixing screw (1 pc.) and remove the cover.

③ Remove the mirror holder spring.

④ Remove the shaft mounting plate, pull out the shaft towards the paper feed side, and remove No. 4/5 mirror unit.

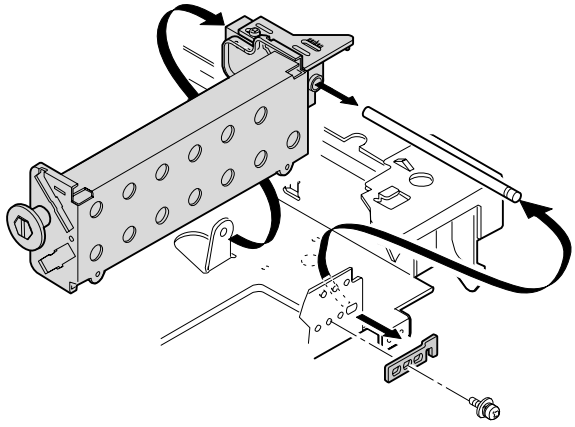

⑤ Remove the fixing screw of the center section of the drive pulley, and remove the pulley.

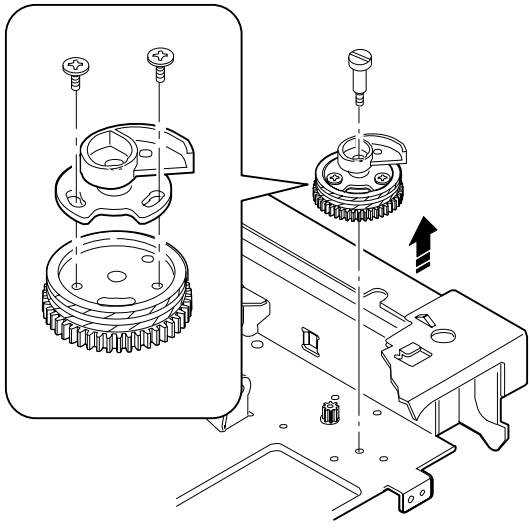

⑥ Remove the CN-E connector of the main PWB, remove the drive motor fixing screws (2 pcs.), and remove the No.4/5 mirror unit from the mounting section (square hole in the base plate).

For assembly, reverse the disassembly procedures.

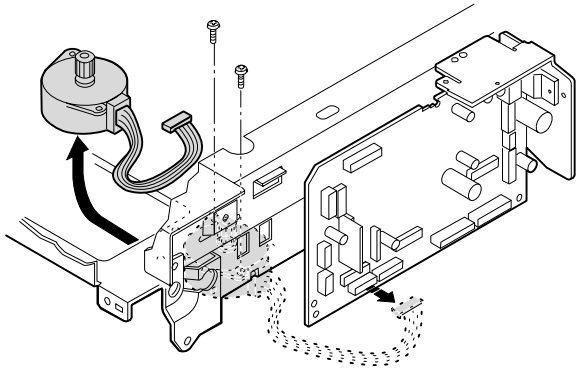

4-6. Optical unit removal

① Remove the drum unit and the developer unit.

② Remove the right cabinet, the left cabinet, the operation panel, the medium cabinet, and the rear cabinet.

③ Remove three connectors Ⓐ from the sensors in the rear as shown in the figure.

④ Remove connector Ⓑ between the mirror motor and the main PWB (CN-C).

⑤ Remove two snap bands Ⓒ which are binding cables of the operation panel.

⑥ Remove the optical unit .

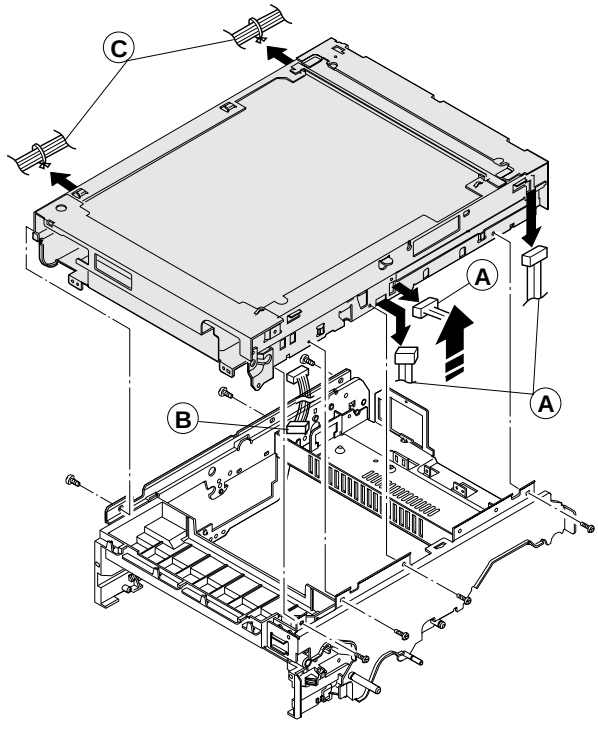

4-7. Other parts in the optical system

① Remove the rear upper cabinet.

② Remove the CN-C connector of the main PWB and the fixing screws (2 pcs.), and pull out the mirror motor towards the rear frame.

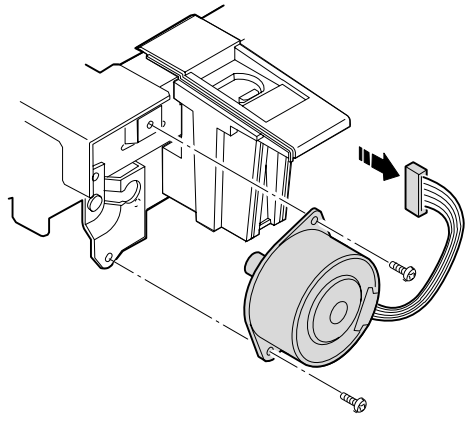

③ Remove the connector and the fixing screw (1 pc.), and remove the mirror home position sensor (MHPS) towards the rear frame.

④ Remove the connector and the fixing screw and pull out the lens home position sensor (LHPS) towards the rear frame.

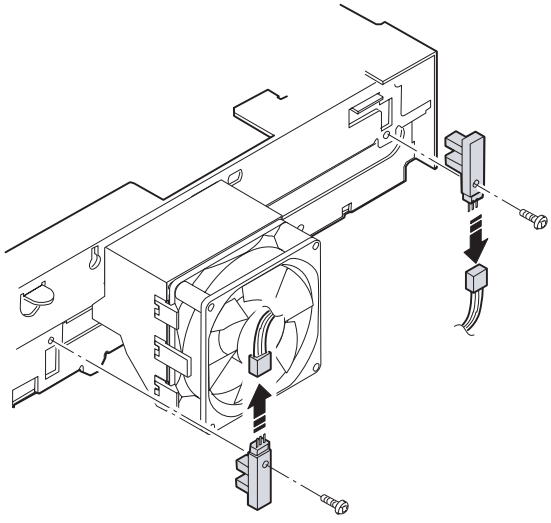

⑤ Remove the fixing screw (1 pc.) of the upper frame and the screw and the connector in the rear frame, then remove the main PWB.

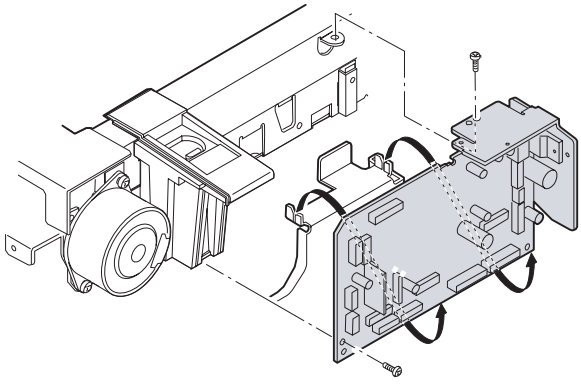

⑥ Remove the connector, the manual paper feed unit, the right upper cabinet, the table glass, and the dark box cover. Remove the fixing screw from the above and remove the AE sensor towards the front frame side.

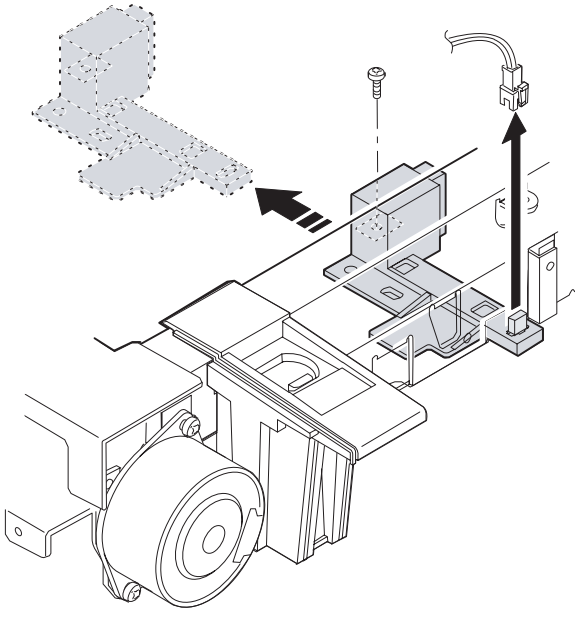

For assembly, reverse the disassembly procedures.

4-8. Light adjustment plate/temperature fuse removal

① Remove the document glass.

② Remove the parts as shown in the figure.

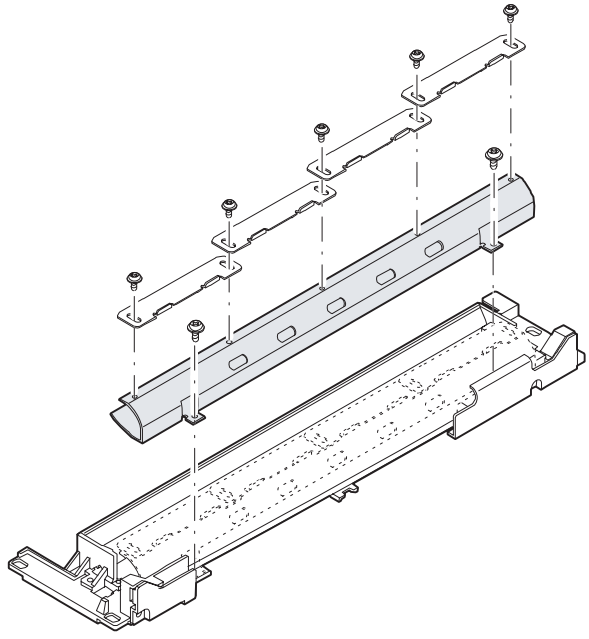

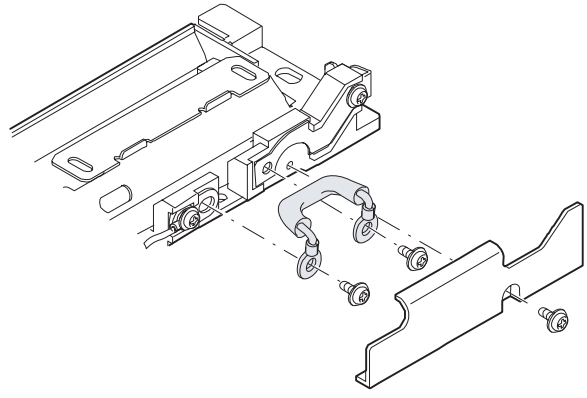

5. Drum section

5-1. Drum unit removal

① Open the front cover.

② While pressing down the release lever Ⓐ, open the toner cartridge slowly. (Arrow Ⓑ)

③ Remove the screw and remove the drum unit.

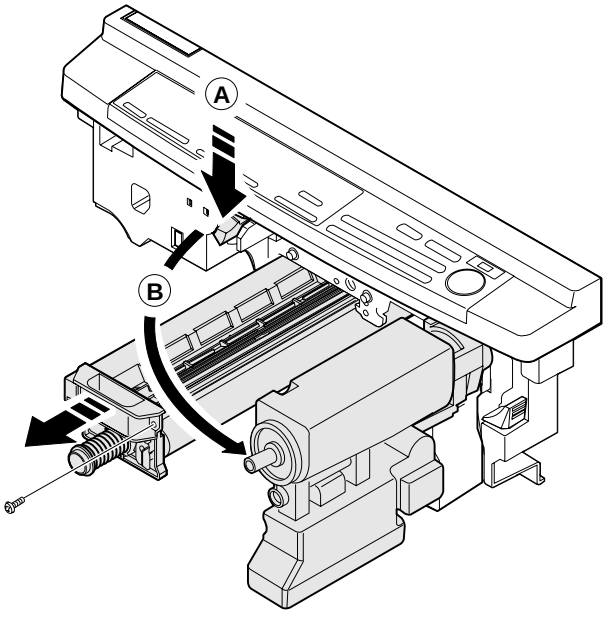

6. Developer section

6-1. Developer unit removal

① Open the front cover.

② While pressing down the release lever, open the toner cartridge slowly and remove it.

③ Loosen the step screw Ⓐ.

④ Pull out the developer unit.

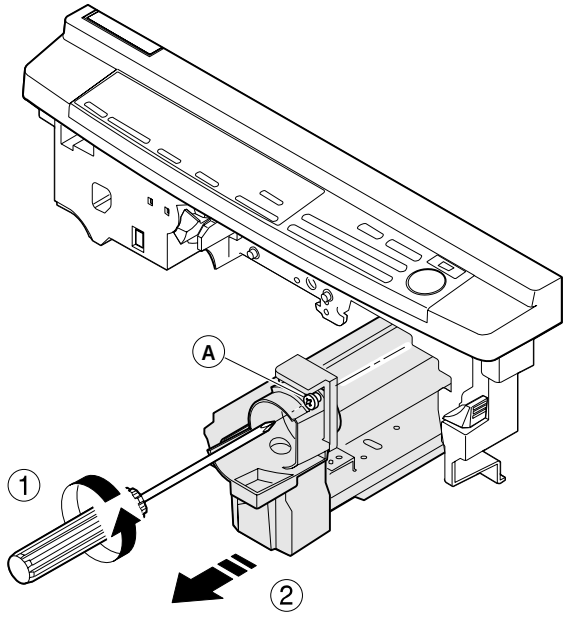

6-2. Developer cartridge removal

① Place the magnet roller of the developer unit on the box to protect it.

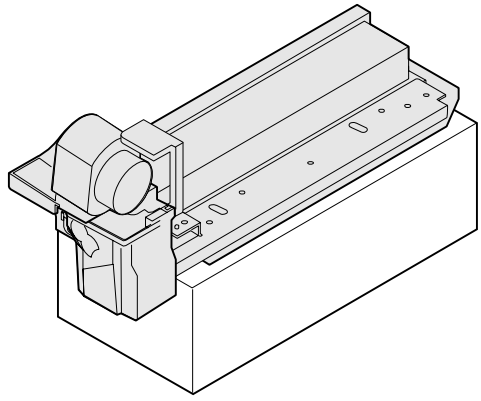

② As shown in the figure below, open the section which is pressing the cartridge pawl with a screwdriver, and pull out the developer cartridge.

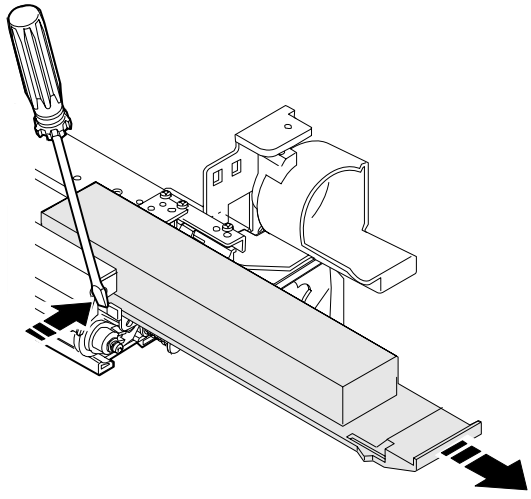

6-3. Toner motor removal

① Remove four short screws Ⓐ and one long screw Ⓑ, and the connector, and separate the toner cartridge section.

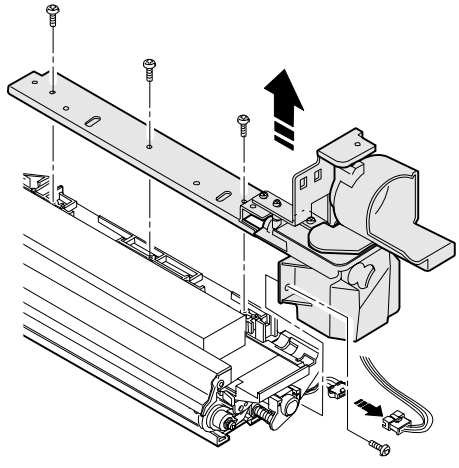

② Remove two screws Ⓒ and remove the motor.

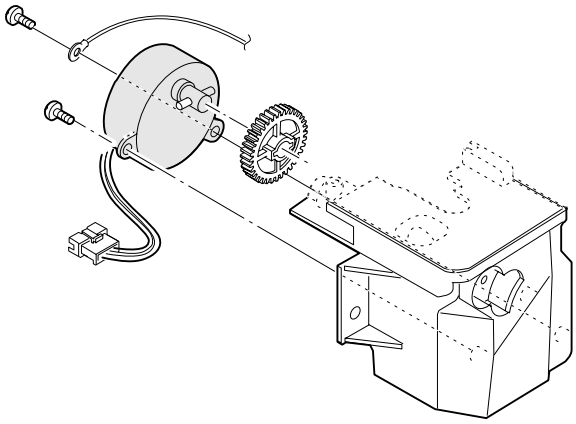

6-4. Toner density sensor

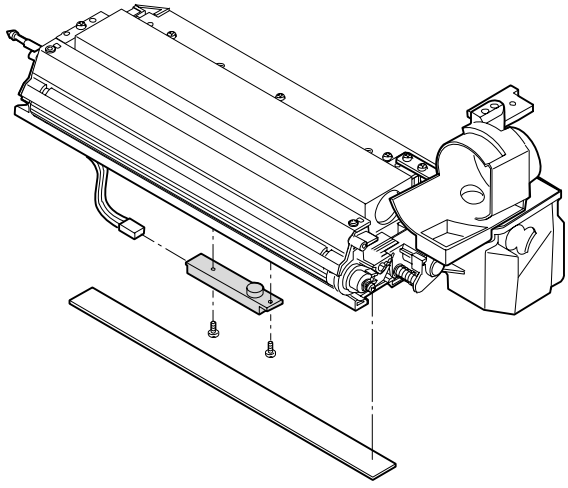

7. Operation panel section/medium cabinet

① Open the front cabinet.

② Remove three screws Ⓐ and two harnesses from the operation panel.

③ Remove the operation panel unit.

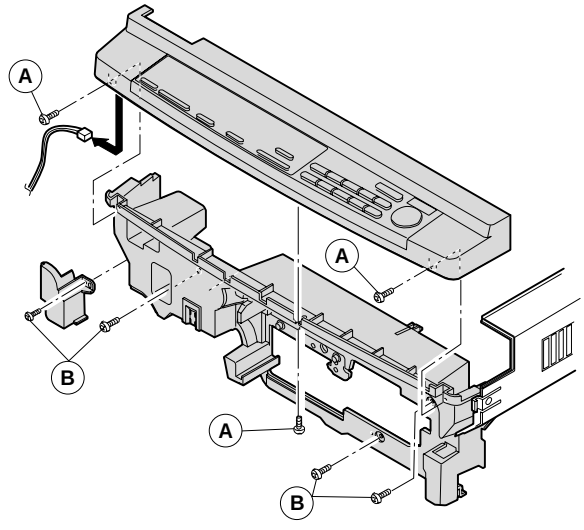

④ When removing the medium cabinet, first remove the process unit and the developer unit then remove four screws Ⓑ and remove the medium cabinet.

8. Major parts in the frame side

8-1. Ozone filter

① Remove the document glass.

② Remove the black sheet and remove the ozone filter.

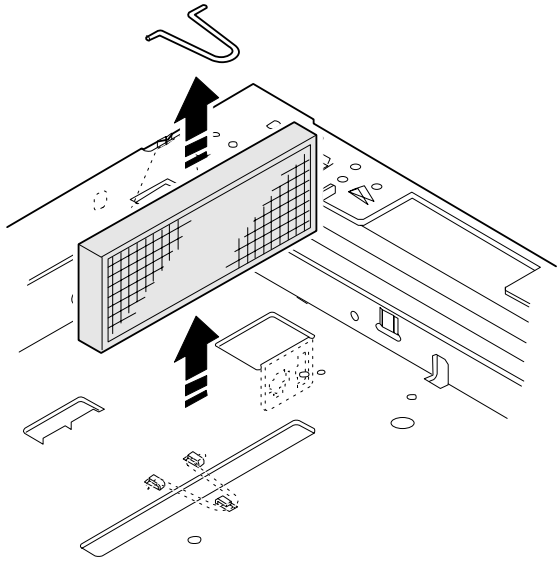

8-2. Optical unit cooling fan removal

① Remove the rear cabinet.

② Remove as shown below.

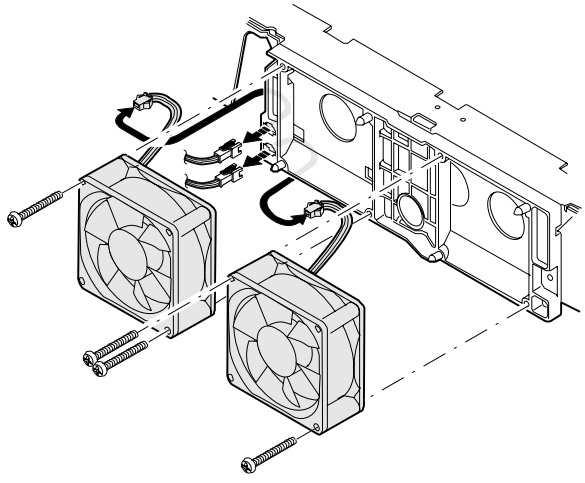

8-3. Ventilation fan motor

① Remove the optical unit. (For details, refer to "4. Optical unit removal.")

② As shown in the figure below, remove the ventilation fan motor.

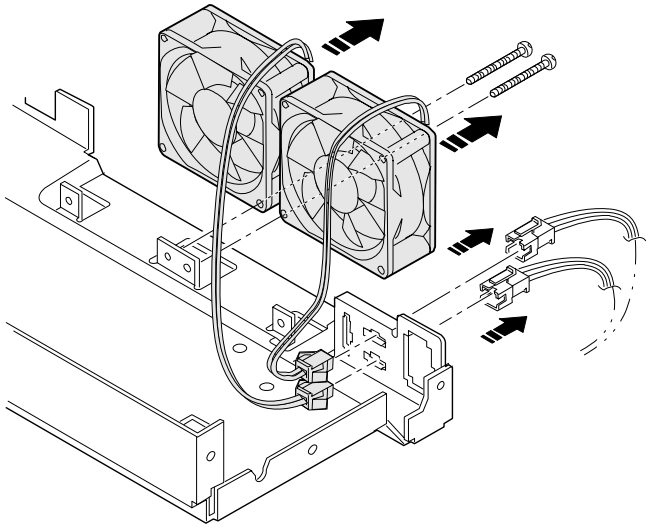

8-4. Transport roller clutch

① Remove the rear cabinet.

② Remove the transport clutch as shown in the figure below.

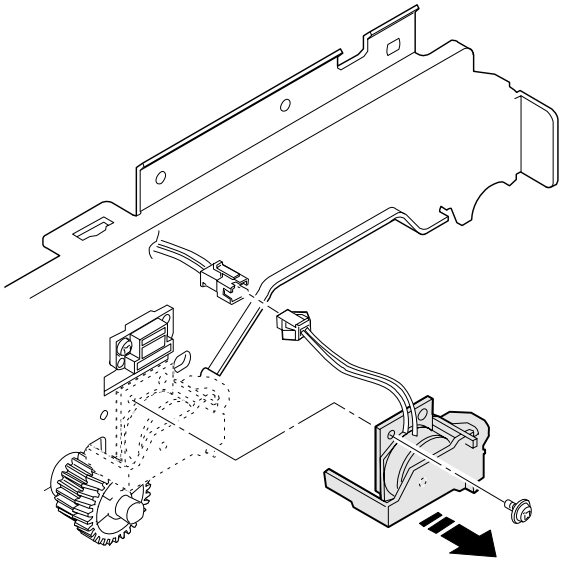

8-5. Paper exit sensor

① Open the front panel.

② Move the open/close lever to the right and open the upper unit slowly.

③ Remove the sensor as shown in the figure below.

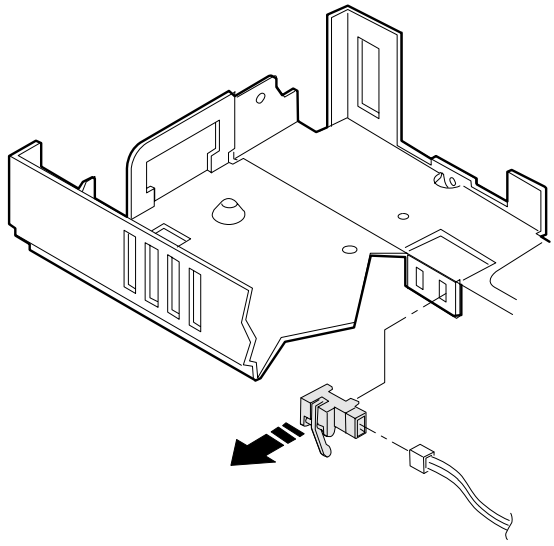

[7] ADJUSTMENTS

The descriptions of this chapter are divided into the following sections:

1. Developer section

(1) MG roller main pole position adjustment

(2) Adjustment of clearance between DV doctor and MG roller

2. Optical section

(1) Lens unit angle adjustment

(2) Mirror unit angle/position adjustment

(3) Image distortion adjustment

(4) Copy image center position adjustment

(5) Focus adjustment

(6) Copy magnification ratio adjustment

(7) Uniformity adjustment

(8) Image loss/void area adjustment

3. Copy density adjustment

(1) Copy Density adjustment timing

(2) Note for copy density adjustment

(3) Necessary thing for copy density adjustment

(4) Copy density adjustment mode

(5) Copy density adjustment procedure

(6) Copy density adjustment table

4. Others

(1) Transfer charger wire installation

(2) DV bias adjustment

(3) Separation charger output adjustment

1. Developer section

(1) MG roller main pole position adjustment

If the MG roller main pole position is improper, the following troubles may occur:

- Insufficient copy density
- Toner splash

① Remove the DV unit from the body and remove the DV cover.

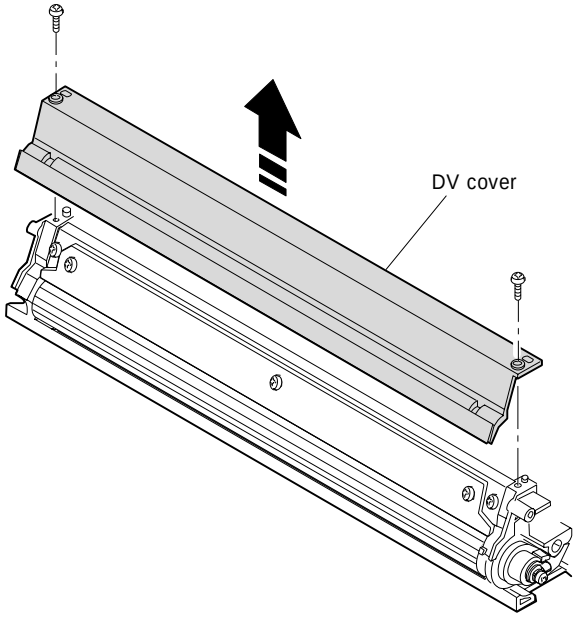

② Tie a string to a needle as shown in the figure below.

③ Hold the string and move the needle to the MG roller.

④ Mark the point where the needle makes contact with the MG roller.

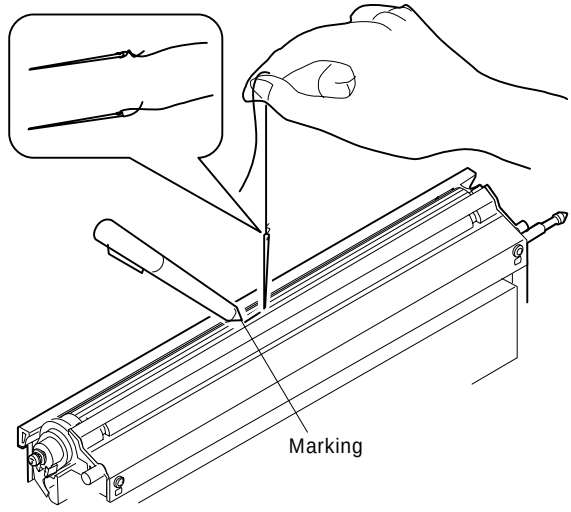

⑤ Measure the distance between the marking and the developer unit bottom Ⓐ and check that the distance is within 15.1mm. If the measured distance is outside the range, loosen the MG adjustment plate fixing screw, and move the adjustment plate in the arrow direction to perform procedures ③ to ⑤ again.

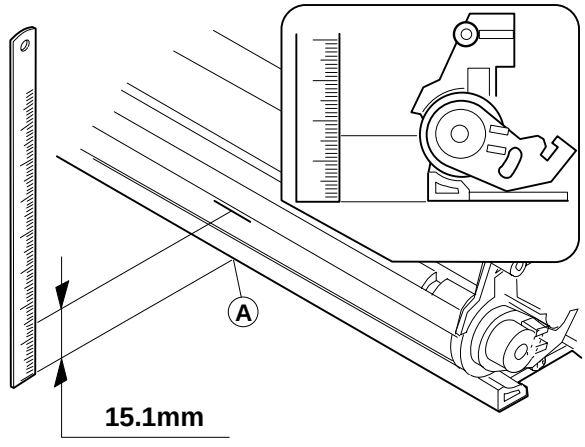

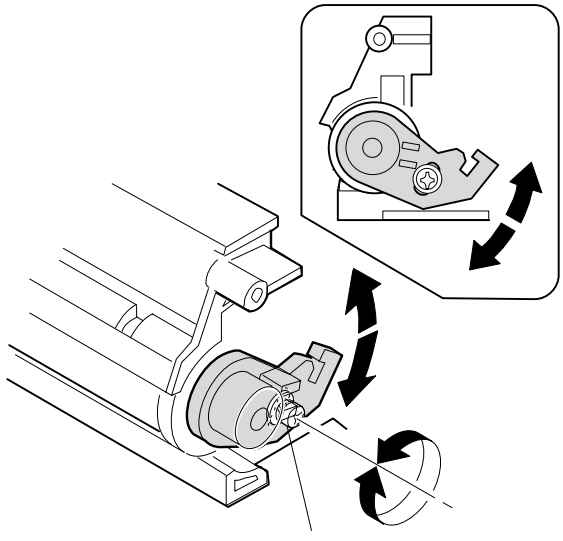

⑥ Tighten the MG adjustment plate fixing screw.

(2) Adjustment of clearance between DV doctor and MG roller

If the clearance between the DV doctor and the MG roller is improper, the following troubles may occur:

- Insufficient copy density
- Copy dirt
- Toner splash

① Remove the DV cover.

② Loosen the DV doctor fixing screw.

③ Insert a 0.625mm thickness gauge into the clearance between the MG roller and the DV doctor in the range of 30mm width under the DV doctor fixing screw.

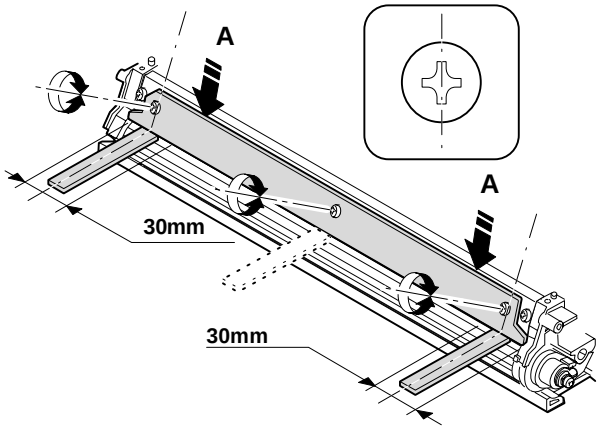

④ Press the DV doctor in the arrow direction and tighten the DV doctor fixing screw.

⑤ Check that the clearance of the DV doctor is 0.625 ±0.03mm in the range of 30mm width under the DV doctor fixing screw.

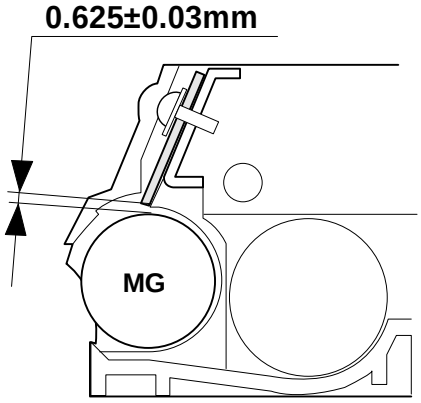

Note: When adjusting, be careful not to scratch the DV doctor.

2. Optical section

A. Adjustments list

Classification	No.	Adjustment content			Adjustment value/Standard value	Necessary special tool	Ref. page
Parts installation position	(1)	Lens	a	Lens unit right angle adjustment	—	—	7-6
	(2)	Mirror	a	No.4/5 mirror unit right angle adjustment	—	—	7-7
			b	No. 4/5 mirror unit drive cam position adjustment	—	—	7-8
Copy picture quality	(3)	Image distortion adjustment	a	Horizontal image distortion adjustment	—	—	7-8
			b	Vertical image distortion adjustment	—	—	7-11
	(4)	Copy image center position adjustment			0 ±1.5 mm	—	7-12
	(5)	Focus adjustment (Resolution adjustment)			⁎	—	7-14
	(6)	Copy magnification ratio adjustment	a	Vertical copy magnification ratio adjustment (normal copy)	100 ±0.8%	—	7-15
			b	Vertical copy magnification ratio adjustment (zoom copy)	100 ±0.9%	—	7-16
			c	Horizontal copy magnification ratio adjustment (zoom copy)	100 ±0.8%	—	7-16
	(7)	Uniformity adjustment			—	—	7-18
	(8)	Image loss, void area adjustment	a	Copy image position adjustment	⁎	—	7-19
			b	Lead edge void area adjustment End edge void area adjustment	⁎	—	7-23

⁎ For details, refer to the Ref. page.

B. Notes

When performing the adjustment, observe the following notes:

1) Observe the sequence of procedures shown in the flowchart below.
2) Adjustment can be started midway in the flowchart only if all the previous items have been properly adjusted.
3) If the content of an adjustment item in the flowchart is changed, all the following items must be adjusted accordingly.
   Any adjustment item is based on the previous adjustment items and relates to the following adjustment items.
4) "Sim" in the flowchart stands for "Simulation."

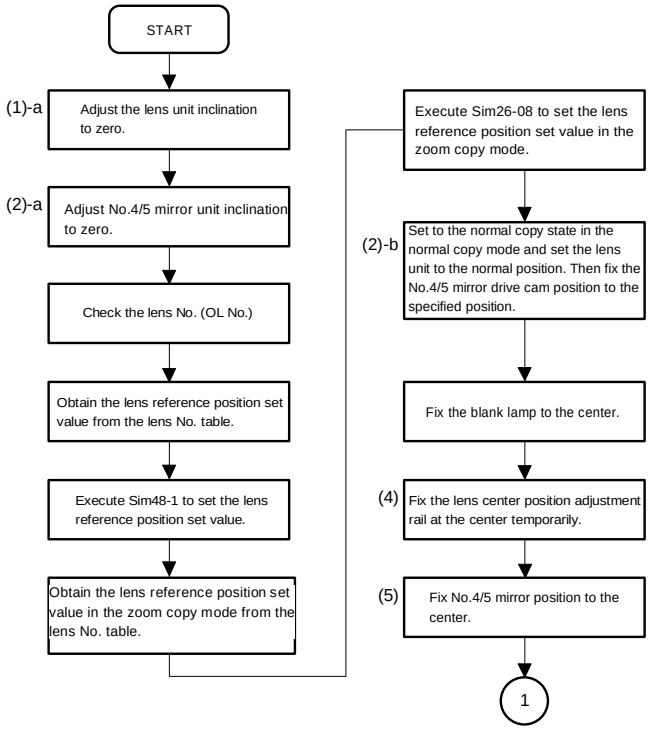

Standard setting value in the sim48-1 and 26-8 (Reference)

Lens No.	–1	0	1	2	3	4	5	6	7	8	9	10	11	12
sim48	77	75	73	72	70	68	67	65	63	61	60	58	56	55
sim26-8	0	1	2	3	4	5	6	7	8	9	10	11	12	13
Lens No.	13	14	15	16	17	18								
sim48	53	51	49	48	46	44								
sim26-8	14	15	16	17	18	19								

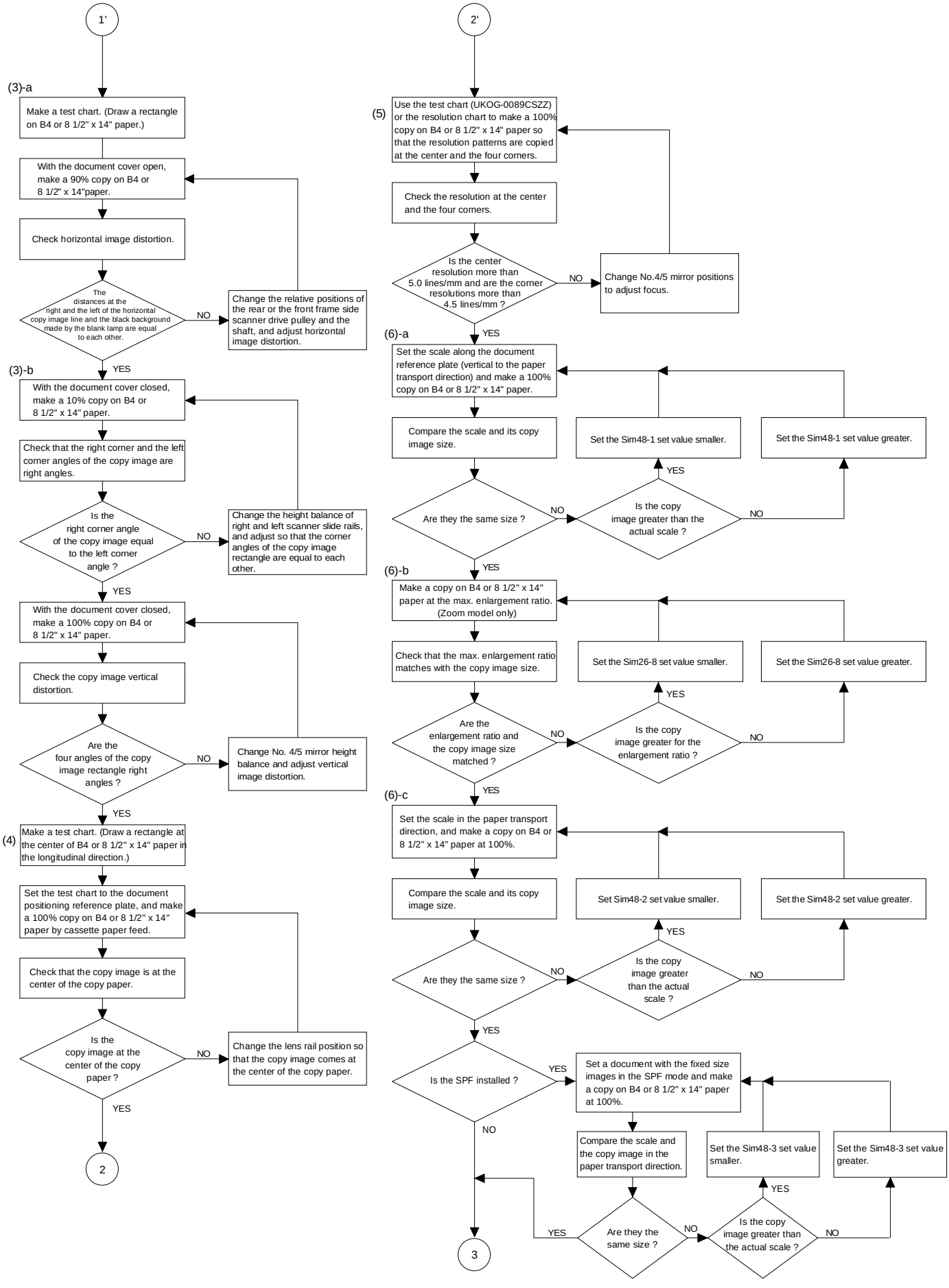
1'
(3)-a
Make a test chart. (Draw a rectangle on B4 or 8 1/2" x 14" paper.)
With the document cover open, make a 90% copy on B4 or 8 1/2" x 14"paper.
Check horizontal image distortion.
The distances at the right and the left of the horizontal copy image line and the black background made by the blank lamp are equal to each other.
NO
Change the relative positions of the rear or the front frame side scanner drive pulley and the shaft, and adjust horizontal image distortion.
YES
(3)-b
With the document cover closed, make a 10% copy on B4 or 8 1/2" x 14" paper.
Check that the right corner and the left corner angles of the copy image are right angles.
Is the right corner angle of the copy image equal to the left corner angle ?
NO
Change the height balance of right and left scanner slide rails, and adjust so that the corner angles of the copy image rectangle are equal to each other.
YES
With the document cover closed, make a 100% copy on B4 or 8 1/2" x 14" paper.
Check the copy image vertical distortion.
Are the four angles of the copy image rectangle right angles ?
NO
Change No. 4/5 mirror height balance and adjust vertical image distortion.
YES
(4)
Make a test chart. (Draw a rectangle at the center of B4 or 8 1/2" x 14" paper in the longitudinal direction.)
Set the test chart to the document positioning reference plate, and make a 100% copy on B4 or 8 1/2" x 14" paper by cassette paper feed.
Check that the copy image is at the center of the copy paper.
Is the copy image at the center of the copy paper ?
NO
Change the lens rail position so that the copy image comes at the center of the copy paper.
YES
2
2'
(5)
Use the test chart (UKOG-0089CSZZ) or the resolution chart to make a 100% copy on B4 or 8 1/2" x 14" paper so that the resolution patterns are copied at the center and the four corners.
Check the resolution at the center and the four corners.
Is the center resolution more than 5.0 lines/mm and are the corner resolutions more than 4.5 lines/mm ?
NO
Change No.4/5 mirror positions to adjust focus.
YES
(6)-a
Set the scale along the document reference plate (vertical to the paper transport direction) and make a 100% copy on B4 or 8 1/2" x 14" paper.
Compare the scale and its copy image size.
Set the Sim48-1 set value smaller.
Set the Sim48-1 set value greater.
YES
Are they the same size ?
NO
Is the copy image greater than the actual scale ?
NO
YES
(6)-b
Make a copy on B4 or 8 1/2" x 14" paper at the max. enlargement ratio. (Zoom model only)
Check that the max. enlargement ratio matches with the copy image size.
Set the Sim26-8 set value smaller.
Set the Sim26-8 set value greater.
YES
Are the enlargement ratio and the copy image size matched ?
NO
Is the copy image greater for the enlargement ratio ?
NO
YES
(6)-c
Set the scale in the paper transport direction, and make a copy on B4 or 8 1/2" x 14" paper at 100%.
Compare the scale and its copy image size.
Set Sim48-2 set value smaller.
Set the Sim48-2 set value greater.
YES
Are they the same size ?
NO
Is the copy image greater than the actual scale ?
NO
YES
Is the SPF installed ?
YES
Set a document with the fixed size images in the SPF mode and make a copy on B4 or 8 1/2" x 14" paper at 100%.
NO
Compare the scale and the copy image in the paper transport direction.
Set the Sim48-3 set value smaller.
Set the Sim48-3 set value greater.
YES
YES
Are they the same size ?
NO
Is the copy image greater than the actual scale ?
NO
3

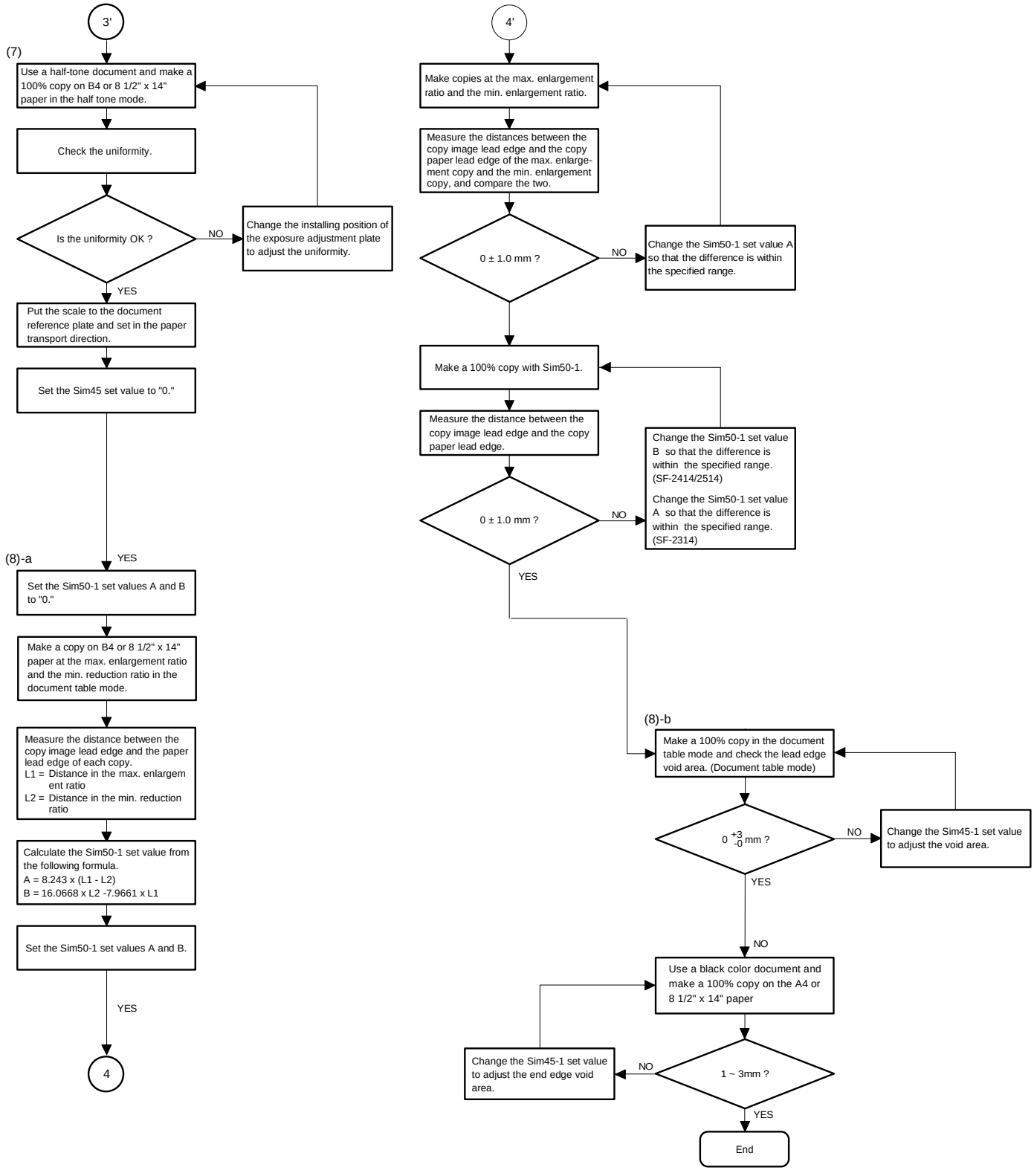
3'
(7)
Use a half-tone document and make a 100% copy on B4 or 8 1/2" x 14" paper in the half tone mode.
Check the uniformity.
Is the uniformity OK ?
NO
Change the installing position of the exposure adjustment plate to adjust the uniformity.
YES
Put the scale to the document reference plate and set in the paper transport direction.
Set the Sim45 set value to "0."
YES
(8)-a
Set the Sim50-1 set values A and B to "0."
Make a copy on B4 or 8 1/2" x 14" paper at the max. enlargement ratio and the min. reduction ratio in the document table mode.
Measure the distance between the copy image lead edge and the paper lead edge of each copy.
L1 = Distance in the max. enlargement ratio
L2 = Distance in the min. reduction ratio
Calculate the Sim50-1 set value from the following formula.
A = 8.243 x (L1 - L2)
B = 16.0668 x L2 -7.9661 x L1
Set the Sim50-1 set values A and B.
YES
4
4'
Make copies at the max. enlargement ratio and the min. enlargement ratio.
Measure the distances between the copy image lead edge and the copy paper lead edge of the max. enlargement copy and the min. enlargement copy, and compare the two.
0 ± 1.0 mm ?
NO
Change the Sim50-1 set value A so that the difference is within the specified range.
Make a 100% copy with Sim50-1.
Measure the distance between the copy image lead edge and the copy paper lead edge.
0 ± 1.0 mm ?
NO
Change the Sim50-1 set value B so that the difference is within the specified range. (SF-2414/2514)
Change the Sim50-1 set value A so that the difference is within the specified range. (SF-2314)
YES
(8)-b
Make a 100% copy in the document table mode and check the lead edge void area. (Document table mode)
0 +3 -0 mm ?
NO
Change the Sim45-1 set value to adjust the void area.
YES
NO
Use a black color document and make a 100% copy on the A4 or 8 1/2" x 14" paper
1 ~ 3mm ?
NO
Change the Sim45-1 set value to adjust the end edge void area.
YES
End

C. Adjustment contents

(1) Lens

a. Lens unit right angle adjustment

I. Summary

By setting the optical axis of the copier body and that of the lens in parallel with each other, copy image distortion due to the lens can be reduced.

The horizontal angle of the lens unit slide shaft is changed by changing the position of the lens unit slide shaft fixing plate.

This adjustment is performed not by checking a copy image, but by visual measurement with the mark on the optical unit base as the reference.

The copy image distortion must be adjusted not only in this adjustment but also in the mirror parallelism adjustment.

II. Purpose

The purpose of this adjustment is to reduce copy image distortion due to the lens by setting the optical axis of the copier body and the optical axis of the lens in parallel with each other.

III. Note

The copy image distortion adjustment is completed by making a copy and adjusting parallelism of the mirror.

For that purpose, this adjustment must have been properly performed.

IV. Cases when the adjustment is required

1) When the lens or the lens unit is disassembled or its part is replaced.

2) When the copy image is distorted as follows (because of different copy magnification ratios in different sections):

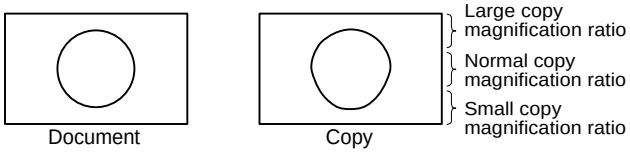

V. Necessary tool

⁎ Screwdriver (+)

VI. Adjustment procedure

1) Remove the right upper side cabinet and the document reference plate.

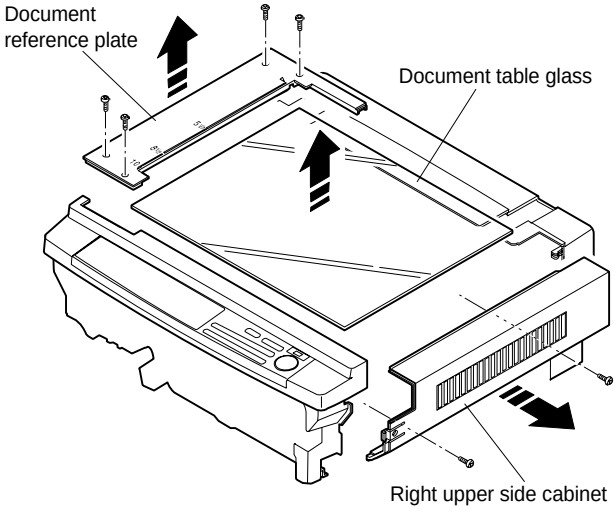

2) Remove the document glass.

3) Remove the optical unit cover.

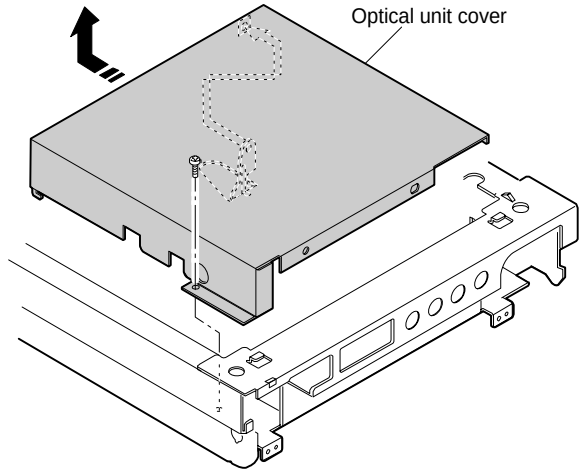

4) Hold section A of the lens unit slide, and move the lens unit side section to the mark on the optical unit base.

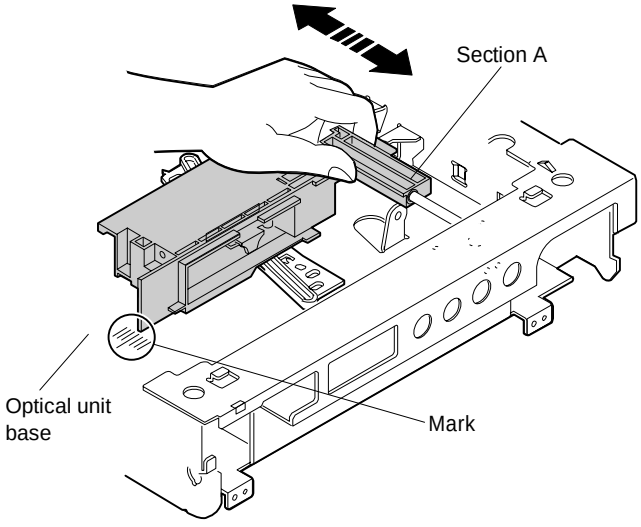

5) Loosen the lens unit slide shaft fixing screw.

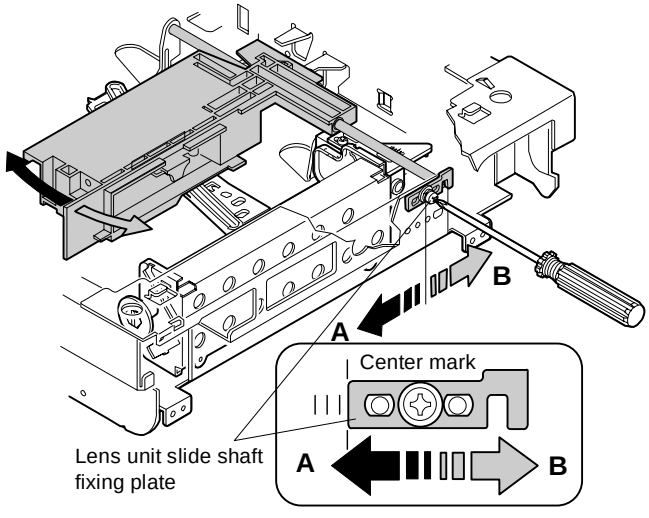

6) Fix the lens unit slide shaft fixing plate in the center mark position.

VII. Troubles caused by improper adjustment

(2) Mirror

There are following adjustments of parts installation positions related to the mirror.

⁎ No. 4/5 mirror unit right angle adjustment

⁎ No. 4/5 mirror unit drive cam position adjustment

a. No. 4/5 mirror unit right angle adjustment

I. Summary

Copy image distortion caused by No. 4/5 mirror unit van be reduced by setting the optical axis of the copier and No. 4/5 mirror unit.

The horizontal angle of the lens unit slide shaft is adjusted by changing the position of No. 4/5 mirror nit slide shaft fixing plate.

This adjustment is performed not by checking a copy image but by visual measurement with the optical unit base plate as the reference.

Copy image distortion must be adjusted ont only in this adjustment but also in the No. 1/2 scanner unit parallelism adjustment.

II. Purpose

The purpose of this adjustment is to eliminate copy image distortion by setting the optical axis of the copier and that of the No. 4/5 mirror unit in parallel with each other.

III. Note

The copy image distortion adjustment is completed by making a copy and adjusting the parallelism of No. 1 and No. 2 scanner units.

For that purpose, this adjustment must have been properly performed.

IV. Cases when the adjustment is required

1) When No. 4/5 mirror unit is disassembled or its part is replaced.

2) When the copy image is distorted as follows:

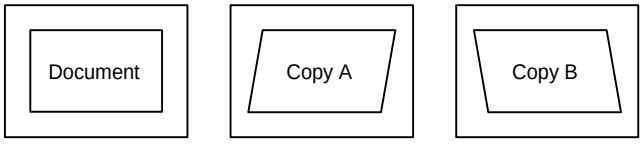

V. Necessary tools:

⁎ Screwdriver (+)

⁎ Scale

VI. Adjustment procedure

1) Remove the right upper side cabinet and the document reference plate.

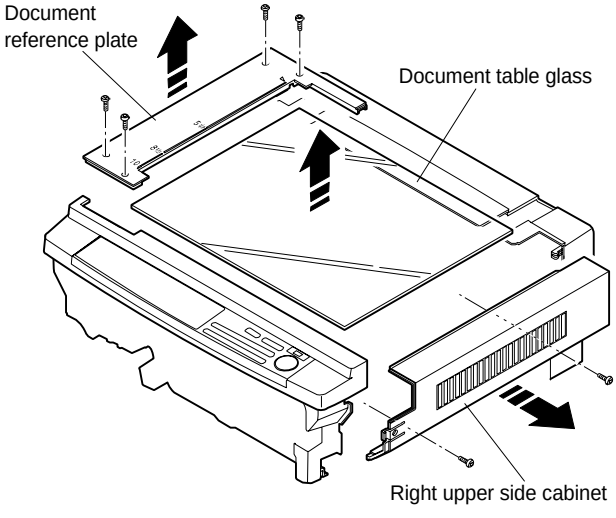

2) Remove the document glass.

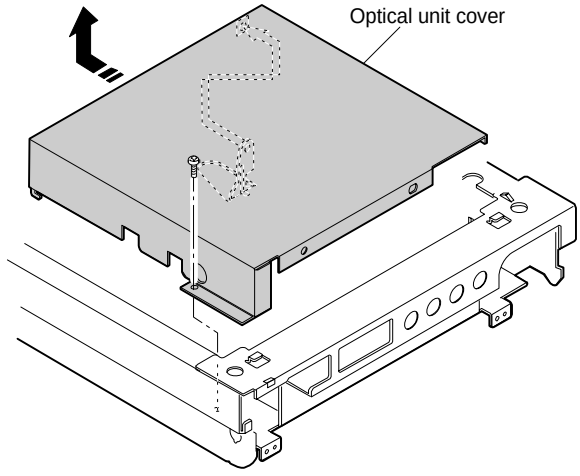

3) Loosen the fixing screw of the No. 4/5 mirror unit slide shaft fixing plate.

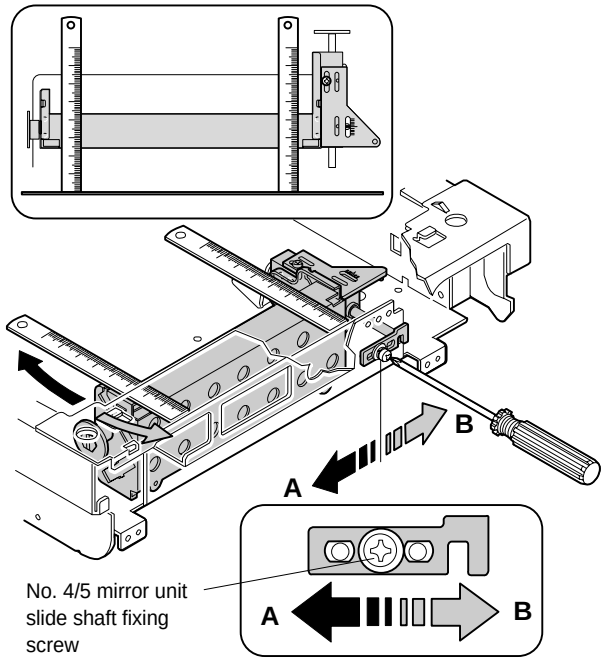

4) Move the No. 4/5 mirror unit slide shaft fixing plate in directions A and B so that the No. 4/5 mirror unit side is in parallel with the optical unit frame side plate, and fix it.

Use a scale to check the parallelism.

VII. Trouble caused by improper adjustment

b. No. 4/5 mirror unit drive cam position adjustment

I. Summary
The copy magnification ratio and focus are properly adjusted by matching the lens unit movement and the No. 4/5 mirror movement.
This adjustment is performed by changing the relative positions of the lens unit drive gear and the No. 4/5 mirror unit drive cam.

II. Purpose
The purpose of this adjustment is to adjust the relative positions of the lens unit drive gear and the No. 4/5 mirror unit drive cam and to adjust the copy magnification ratio and the focus.

III. Note

IV. Cases when the adjustment is required

1) When the lens and the No. 4/5 mirror drive section are disassembled or its part is replaced.

2) When the focus is improper though the copy magnification ratio is proper, or vice versa.

V. Necessary tools

⁎ Screwdriver (+)

⁎ M4 x 20 screw

VI. Adjustment procedure

1) Set the copy magnification ratio to 100%, and set the lens unit to the position for 100% copy magnification ratio.

2) Remove the right side cabinet and the document reference plate.

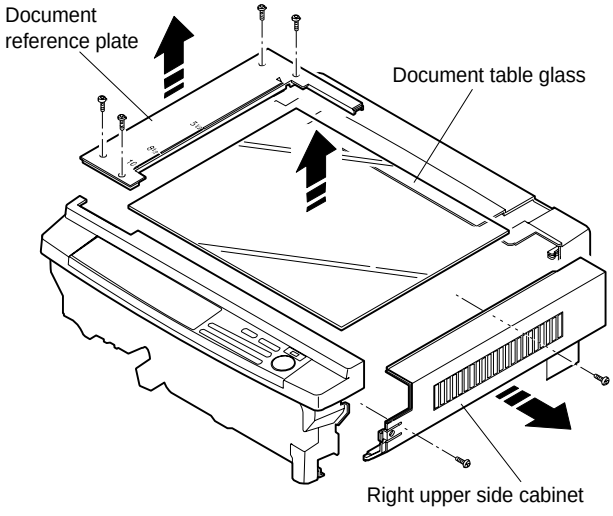

3) Remove the document glass.

4) Remove the optical unit cover.

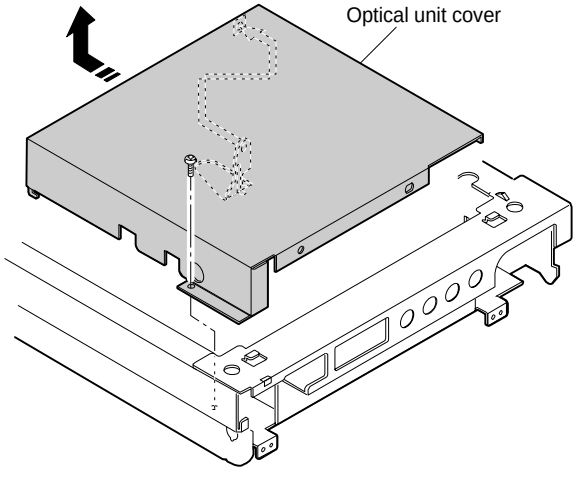

5) Loosen the No. 4/5 mirror unit drive cam fixing screw without moving the lens unit drive gear.

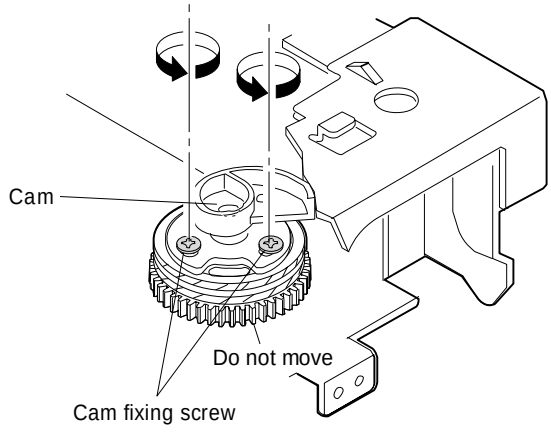

6) Turn the No. 4/5 mirror unit drive cam without moving the lens unit drive gear so that the cam positioning hole is fit with the reference hole in the optical unit frame.

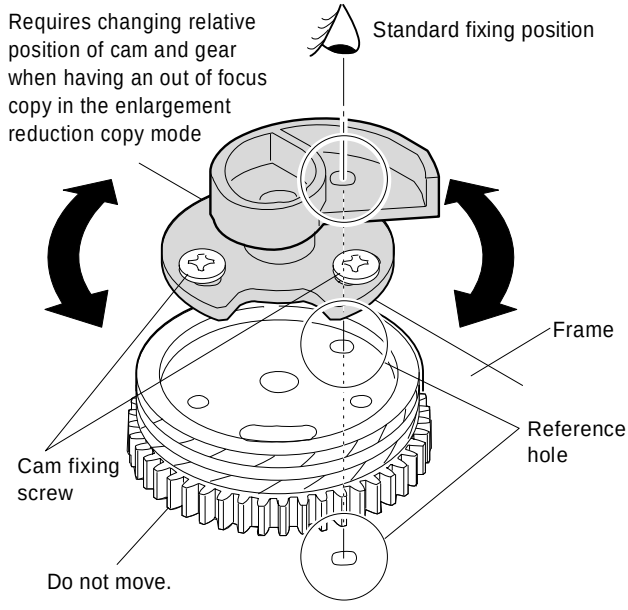

7) Pass the M4 x 20 screw through the No. 4/5 mirror unit drive cam positioning hole and fix the screw to the frame without turning the cam.

8) Tighten the cam fixing screw to fix the No. 4/5 mirror unit drive cam to the lens unit drive gear without moving the lens unit drive gear.

9) Remove the screw which was fixed to the frame in procedure 7).

VII. Troubles caused by improper adjustment

(3) Image distortion adjustment

There are following two types of image distortion.

⁎ Horizontal image distortion

⁎ Vertical image distortion

Image distortion is generated mainly by insufficient parallelism of the mirror and misalignment of the lens optical axis.
In this model, image distortion is adjusted by adjusting parallelism of each mirror.

a. Horizontal image distortion adjustment

I. Summary
This adjustment is to adjust horizontal image distortion by setting the horizontal optical axis of the copier and the horizontal optical axis of each mirror in parallel with each other. The relative positions of the front frame and the scanner unit drive pulley of the frame are changed to perform the above adjustment.

Install the No. 1 and No. 2 scanner units to the specified positions, adjust the mechanical horizontal parallelism, and perform the final adjustment while making copies.

II. Purpose

The purpose of this adjustment is to reduce horizontal image distortion by setting the horizontal optical axis of the copier and the No. 1 and No. 2 scanner unit horizontal optical axis in parallel with each other.

III. Note

Before starting this adjustment, the following items must have been completed. If not, this adjustment cannot reduce image distortion.

- ⁎ The lens unit right angle adjustment must have been completed.
- ⁎ The No. 4/5 mirror unit right angle adjustment must have been completed.

IV. Cases when the adjustment is required

1) When the No. 1 and No. 2 scanner units are disassembled or their part is replaced.
2) When the scanner unit drive section is disassembled or its part is replaced.
3) When the copy image is distorted as shown below:

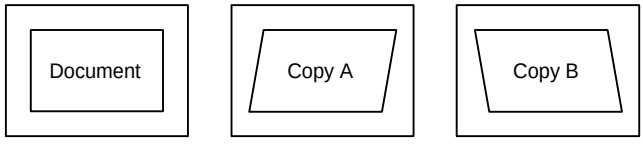

V. Necessary tools

- ⁎ Screwdriver (+)
- ⁎ Hex wrench
- ⁎ Scale
- ⁎ Test chart for distortion adjustment (Make a chart shown below by yourself.)
  Draw a rectangle on a paper (B4 or 8 1/2" x 14") as shown below.
  Be sure to make four right angles.

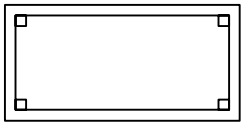

L=10mm

VI. Adjustment procedure

1) Remove the right upper side cabinet and the document reference plate.

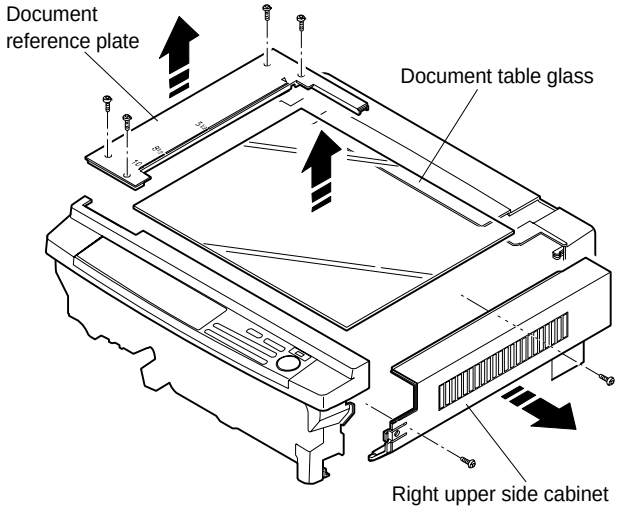

2) Remove the document glass.
3) Loosen the fixing screw of the No. 1 scanner unit wire.

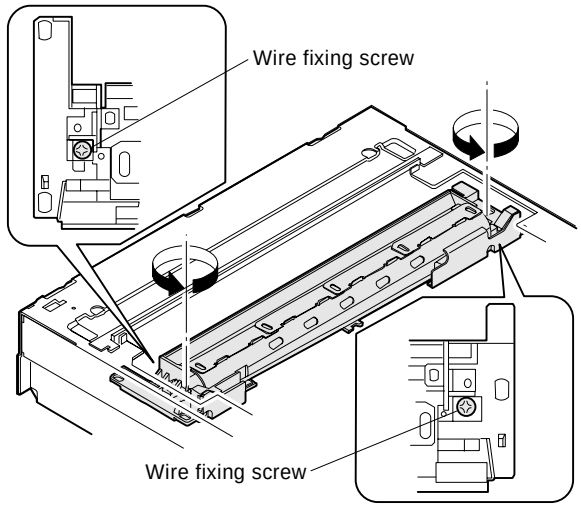

4) Manually turn the scanner unit drive gear to bring No. 2 scanner unit into contact with No. 2 scanner unit positioning plate. When No.2 scanner unit makes contact with No.2 scanner unit positioning plate in the rear frame side simultaneously, the mechanical parallelism of No.2 scanner unit is proper.
   If one side of No.2 scanner unit makes contact with No.2 scanner unit positioning plate and the other side does not, the parallelism is improper.
   If the parallelism is improper, perform the procedure of step 5).

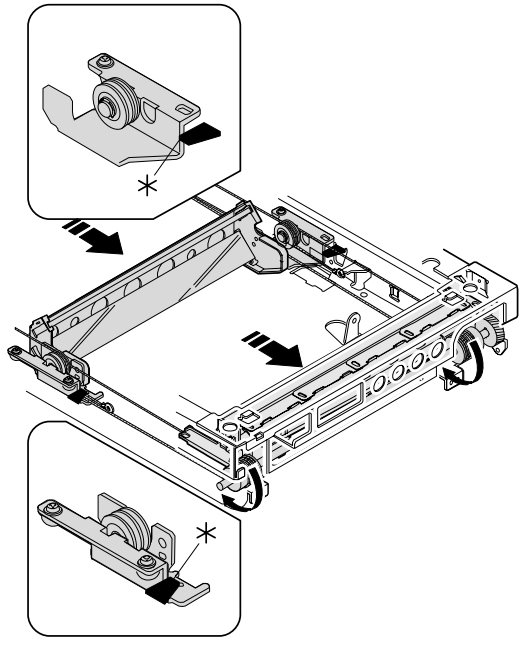

5) Loosen the scanner unit drive pulley setscrew in the side where No.2 scanner unit does not make contact with No.2 scanner unit positioning plate.

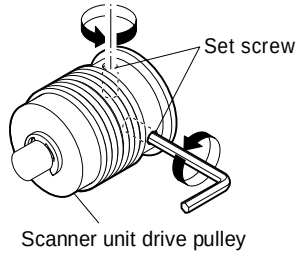

6) Without moving the scanner unit drive pulley shaft, manually turn the scanner unit drive pulley in the same side of the loosened setscrew. When it makes contact with No.2 scanner unit positioning plate, tighten and fix the setscrew.

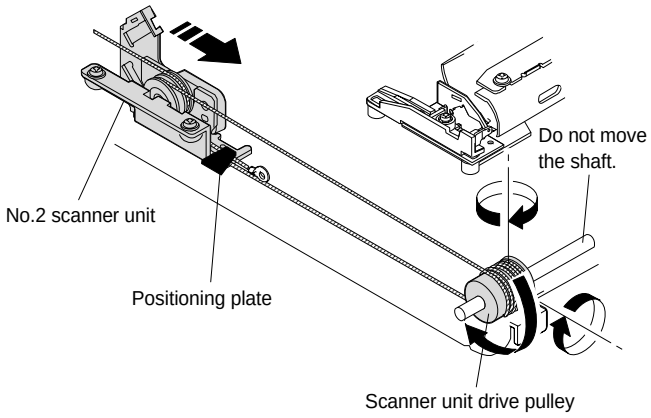

(Note)
Allow a clearance of about 0.5mm between the scanner unit drive pulley and the positioning E-ring.

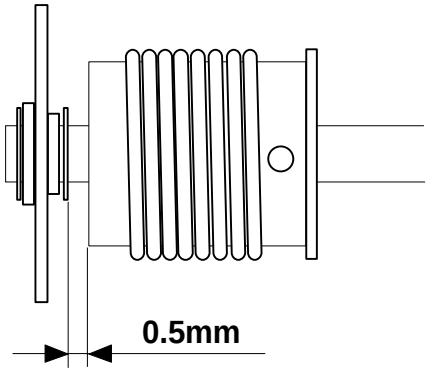

7) Manually turn the scanner unit drive gear to bring No.2 scanner unit into contact with the positioning plate, and perform the procedure of step 4).
Repeat procedures of steps 4) to 7) until the parallelism of No.2 scanner unit is properly set.

8) With No.2 scanner unit being in contact with No.2 scanner unit positioning plate, and insert the 1.0 mm spacer between No.1 scanner unit and upper-R frame, bring No.1 scanner unit into contact with upper-R frame, and fix it to the scanner unit drive wire.

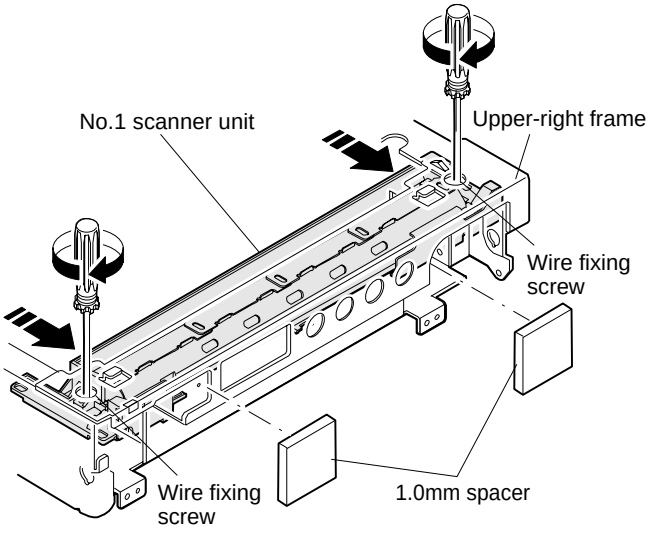

Procedures 1) to 8) are for adjustment of mechanical horizontal parallelism. No.1 scanner unit and No.2 scanner unit are fixed to the specified positions and the mechanical horizontal parallelism of No.2 scanner unit is adjusted.

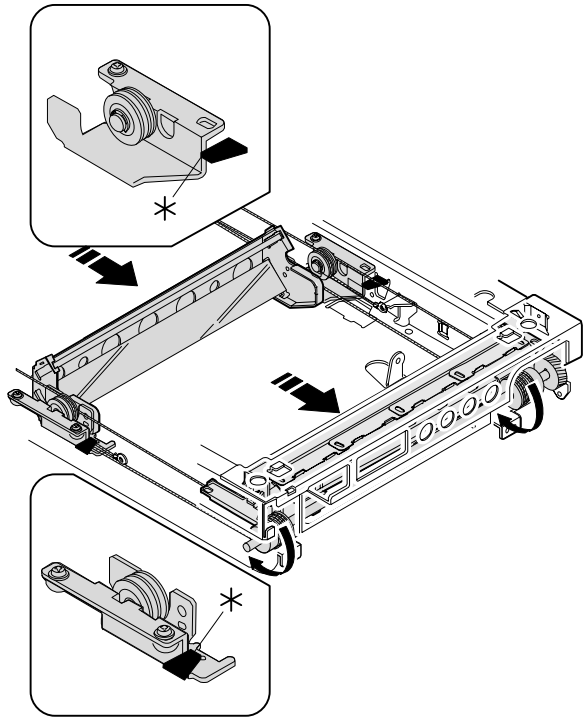

Then the optical horizontal parallelism must be adjusted in the following procedures.

9) Set the image distortion check chart on the document table, and make a reduction copy (90%) on an B4 or 14" x 8 1/2" paper with the document cover open.

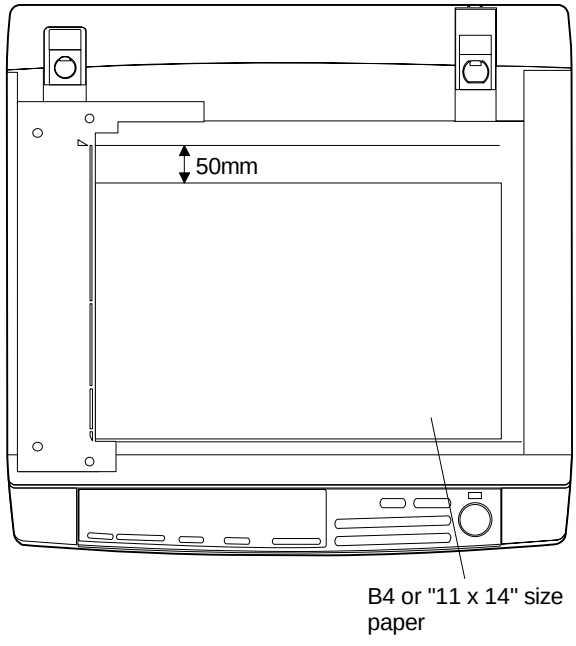

10) Check the horizontal image distortion.
If LL = LR, there is no horizontal distortion.

LL and LR = Distance between the copy horizontal line and the outer edge of the black background

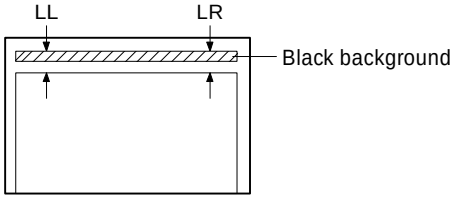

11) If LL is not equal to LR, perform the following procedure.
Loosen the setscrew of the scanner unit drive pulley in the front or the rear frame.

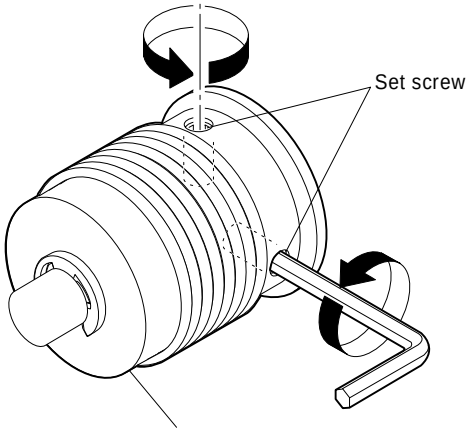

12) Without moving the scanner unit drive pulley shaft, manually turn the scanner unit drive pulley whose setscrew was loosened, and adjust the parallelism of No.1 and No.2 scanner units.

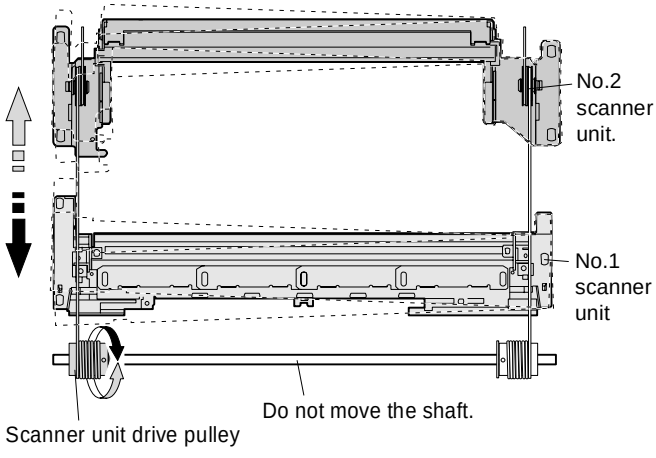

13) Tighten the set screw of the scanner unit drive pulley.
14) Check the image distortion in the same manner as step 10).
Repeat procedures 11) to 14) until horizontal image distortion is eliminated.

VII. Troubles caused by improper adjustment

b. Vertical image distortion adjustment

I. Summary
This adjustment is to adjust parallelism of the vertical optical axis of the copier and that of each mirror to eliminate vertical image distortion.
For adjusting vertical image distortion, the overall adjustment and the right-left balance adjustment must be performed independently.
The overall adjustment is performed by changing the height of No.4/5 mirror unit in the front frame side. The right-left balance adjustment is performed by changing the right-left balance of No.2 scanner unit rail.
The right-left balance adjustment must be performed in advance to the overall adjustment.

II. Purpose
The purpose of this adjustment is to set parallelism of the vertical optical axis of the copier and that of No.4/5 mirror unit and No.2 mirror unit to eliminate vertical image distortion.

III. Note
Before performing this adjustment, the following adjustments must have been completed.
If not, this adjustment cannot be performed properly.
- The lens unit right angle adjustment
- No.4/5 mirror unit right angle adjustment
- Horizontal image distortion adjustment

IV. Cases when the adjustment is required
1) When No.4/5 mirror unit is disassembled or its part is replaced.
2) When the scanner unit drive section is disassembled or its part is replaced.
3) When the copy image is distorted as follows:

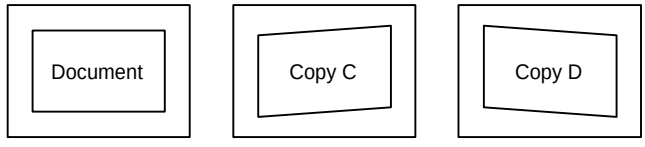

V. Necessary tools
- Screwdriver (+)
- Screwdriver (–)
- Scale
- Test chart for distortion adjustment (Make by yourself.)
Draw a rectangle on A4 or 8 1/2" x 11" paper as shown below:
Be sure to make four right angles.

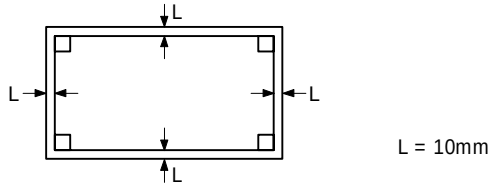

VI. Adjustment procedure

1) Set the test chart for image distortion adjustment on the document glass, and make a normal copy on a paper of A4 or 8 1/2" x 11".

2) Check image distortion in the right and the left sides.
If the both vertical lines are in parallel with each other, the right-left distortion balance is proper. (However, there may be some distortion.)
If all the four angles are right angles, there in no distortion and the following procedures are not required.

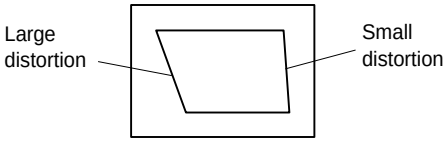

3) If the right-left distortion balance is improper, loosen the fixing screw of No.2 scanner unit rail to change and adjust the right-left balance of No.2 scanner unit rail.
(Note)
This procedure is to have the balance between the right image distortion and the left image distortion, which does not mean to eliminate the image distortion. Change the height of No.2 scanner unit rail in the greater distortion side.
If the distortion in the lead edge side (when viewed in the paper transport direction) is greater, change the height of the left rail of No.2 scanner unit.
If the distortion in the rear edge side (when viewed in the paper transport direction) is greater, change the height of the right rail of No.2 scanner unit.

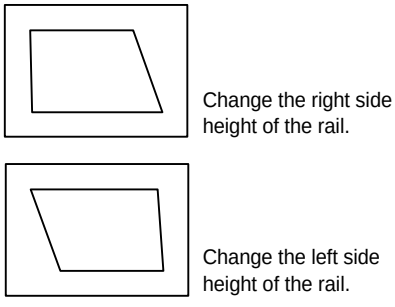

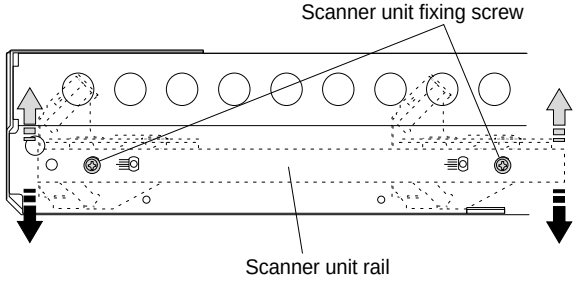

Repeat procedures 2) and 3) until the right-left balance of image distortion is proper.

4) Change the height of the roller in No.4/5 mirror unit front frame side to adjust the vertical image distortion.
If the copy image is tilting as shown in sample (X) below, lower No.4/5 mirror unit. If it is tilting as shown in sample (Y) below, lift No.4/5 mirror unit.

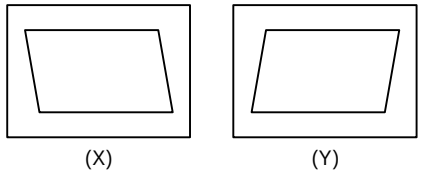

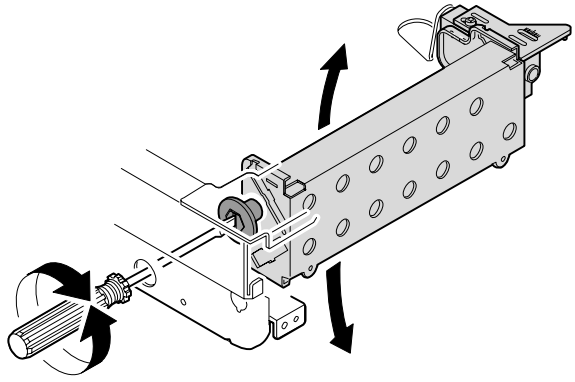

5) Make a copy to check the vertical image distortion.
If the four angles are right angles, the adjustment is completed.

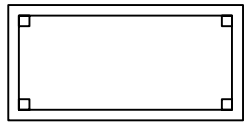

Repeat procedures 4) and 5) until the vertical image distortion is eliminated.

(Note) If a vertical image distortion is not eliminated with procedure 4), change the overall height of No.2 scanner unit rail. Then repeat procedures 1) to 5).

VII. Troubles caused by improper adjustment

(4) Copy image center position adjustment

I. Summary
The optical axis is changed by changing the lens rail position to optically align the document table and the vertical position of the copy image on the copy paper.
When the lens rail position is changed, the lens position in the front and the rear frame direction is changed to change the optical axis.
As a result, the document table is optically aligned with the copy image on the copy paper.

II. Purpose
The purpose of this adjustment is to set the copy image center at the vertical center of the copy paper.

III. Note

Before performing this adjustment, the following adjustment must have been completed. If not, this adjustment cannot be performed properly.

- ⁎ Lens unit right angle adjustment
- ⁎ No.4/5 mirror unit right angle adjustment
- ⁎ Image distortion adjustment

IV. Cases when the adjustment is required

1) When the lens unit is disassembled or its part is replaced.
2) When the lens rail is disassembled or its part is replaced.
3) When the copy image is shifted from the vertical center of the paper.

V. Necessary tool

- ⁎ Screwdriver (+)
- ⁎ Scale
- ⁎ Test chart for center position adjustment (Make a chart shown below by yourself.)
  Draw a line in the paper transport direction at the center of A4 or 8 1/2" x 11" paper.

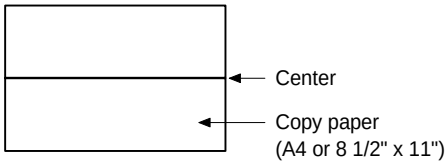

VI. Adjustment procedure

1) Set the test chart for center position adjustment at the document reference position.
2) Make a normal copy (100%) on A4 or 8 1/2" x 11" paper.
3) Check that the image of the line is at the center of the paper. (Standard: 0±1.5mm)

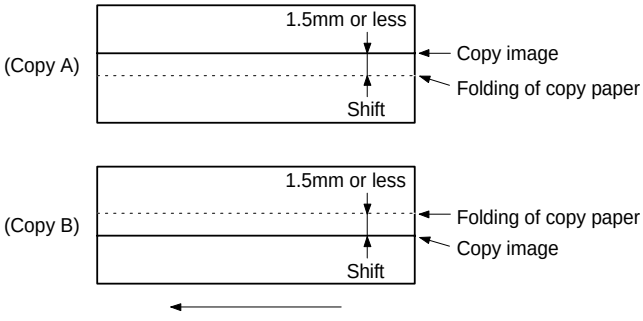

4) If the image of the line is not at the center of the paper, perform the following procedure.

5) Remove the right side cabinet and the document reference plate.

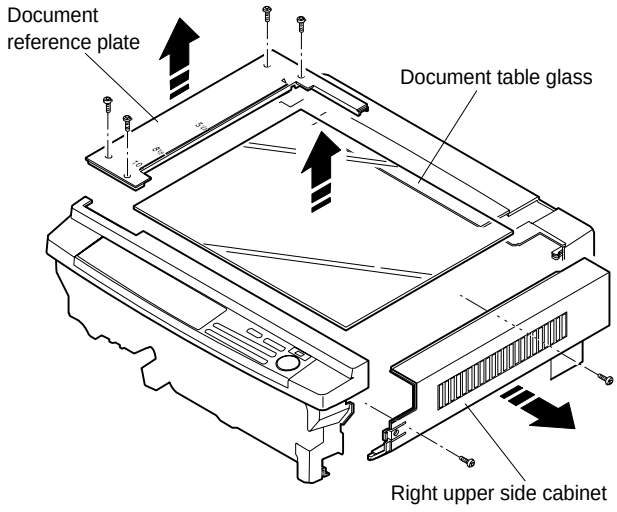

6) Remove the document glass.
7) Remove the optical unit cover.

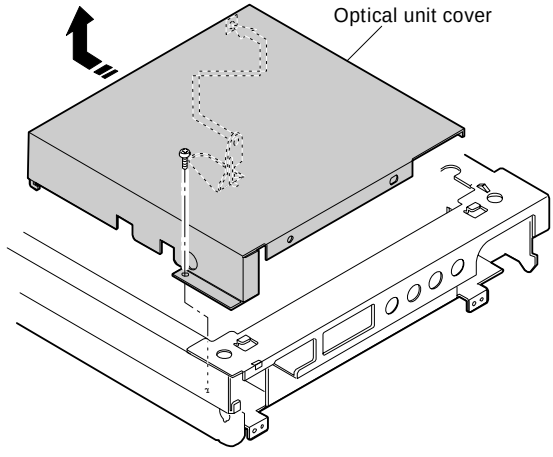

8) Loosen the lens rail fixing screw, and slide the lens rail back and forth.

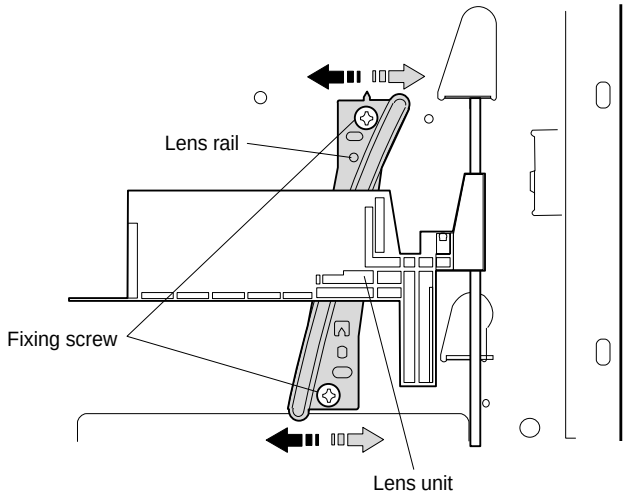

9) Make a copy and check that the image line is at the center of the paper. If not, repeat the procedures 1) to 9) until the image line comes at the center of the paper.

VII. Troubles caused by improper adjustment

(5) Focus adjustment (Resolution adjustment)

I. Summary
The distance between the document and the photoconductor drum is changed by changing No.4/5 mirror unit drive lever position to adjust the focus.

II. Purpose
The purpose of this adjustment is to correct the lens variations and the optical section dimensional variations to have good copy images with a proper focus.

III. Note
Before performing this adjustment, the following adjustment must have been completed. If not, this adjustment cannot be performed properly.

⁎ Image distortion adjustment

IV. Cases when the adjustment is required

1) When the lens or the mirror unit is disassembled or any one of their parts is replaced.
2) When the scanner unit drive section is disassembled or its part is replaced.
3) When a copy image of improper focus is obtained.

V. Necessary tools

⁎ Screwdriver (+)
⁎ Test chart (One with the resolution adjustment chart)

VI. Adjustment procedures

1) Set the test chart on the document table.
2) Make a normal copy (100%) on A4 or 8 1/2" x 11" paper.
3) Check that resolutions at the copy paper center and the four angles are as shown in the table below:

(Standard) (Unit: lines/mm)

	Copy center	Corner
Normal (100%)	5.0	4.5
Enlargement	5.0	4.5
Reduction	4.5	3.6

(Copy)

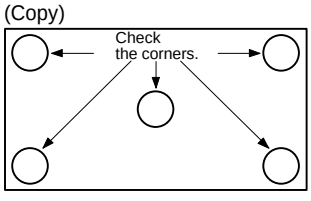

If any resolution is out of the above specifications, perform the following procedures.

4) Remove the right cabinet and the document reference plate.

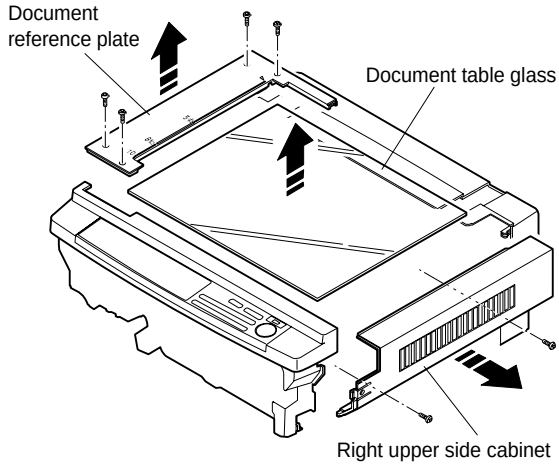

5) Remove the document glass.
6) Remove the optical unit cover.

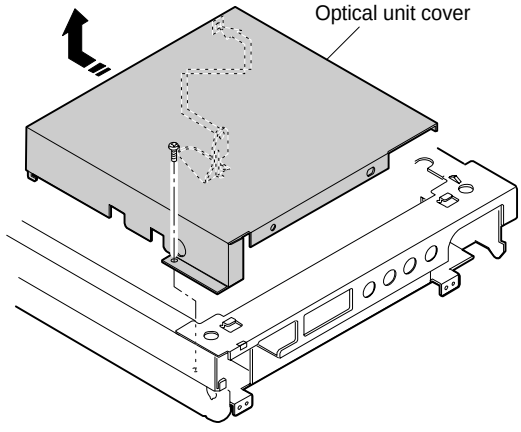

7) Loosen the fixing screw of No.4/5 mirror unit drive lever to change the position of No.4/5 mirror unit drive lever or No.4/5 mirror unit.
In this case, do not shake No.4/5 mirror unit, just change its position.

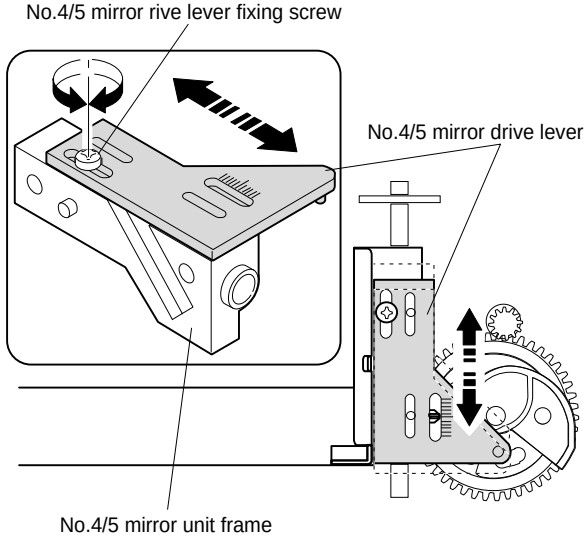

8) Make a copy and check that the resolutions are in the specified range.
If any resolution is out of the specified range, repeat procedures 1) to 8).

VII. Troubles caused by improper adjustment

(6) Copy magnification ratio adjustment

The copy magnification ratio adjustment must be performed in the vertical direction and in the horizontal direction.
In addition, the horizontal copy magnification ratio adjustment must be performed both in the document table mode and in the SPF mode.
Firstly perform the vertical copy magnification ratio adjustment, then perform the horizontal copy magnification ratio adjustment.

a. Vertical copy magnification ratio adjustment (Normal copy)

I. Summary
The vertical copy magnification ratio adjustment must be performed in the normal (100%) copy mode and in the zoom copy mode.
In the normal (100%) copy mode, the lens home position is changed voluntarily with simulations 48-1 to adjust the vertical copy magnification ratio.
In the zoom copy mode, the lens shift ratio is changed with simulations 48-1 according to the lens home position set with simulations 48-1 to adjust the zoom copy magnification ratio.
The vertical copy magnification ratio adjusted in this procedure is used for the horizontal copy magnification ratio adjustment.

II. Purpose
The purpose of this adjustment is to fit the displayed copy magnification ratio with the actual copy image size.

III. Note
Before performing this adjustment, the following adjustments must have been completed. If not, this adjustment cannot be performed properly.

- ⁎ Image distortion adjustment
- ⁎ Focus adjustment

Firstly adjust the vertical magnification ratio in the normal (100%) copy mode, then adjust in the zoom copy mode. Never reverse the sequence.
The vertical magnification ratio adjustment in the zoom copy mode must be performed when the vertical magnification ratio in the normal (100%) copy mode is proper but the copy size is not proper in the zoom copy mode.
The vertical magnification ratio adjustment must be performed in advance to the horizontal copy magnification ratio adjustment. Never reverse the sequence. (The horizontal copy magnification ratio is based on the vertical copy magnification ratio.)

IV. Cases when the adjustment is required

1) When the lens and the mirror unit are disassembled or the part is replaced.
2) When the scanner unit drive section is disassembled or the part is replaced.
3) When the main PWB is replaced.
4) When the RAM in the main PWB is replaced.
5) When "U2" trouble occurs.
6) When the position of the lens home position sensor is changed.
7) When the lens home position sensor is replaced.
8) When the copy image distortion adjustment is performed.
9) When the center position of copy image is adjusted.
10) When the focus is adjusted.

V. Necessary tools

- ⁎ Screwdriver (+)
- ⁎ Scale

VI. Adjustment procedure
(Normal (100%) copy mode: Vertical copy magnification ratio adjustment)

1) Set the scale vertically on the document table. (Use a long scale for precise adjustment.)

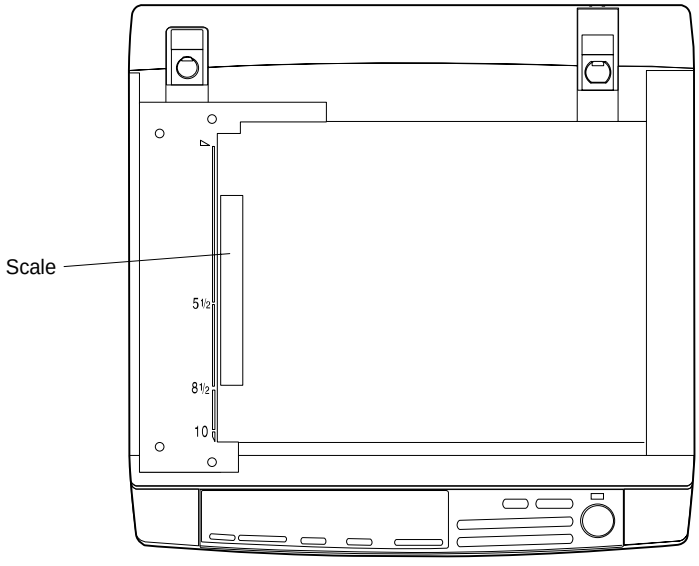

2) Set the copy magnification ratio to 100%.
3) Make a copy on A3 or 11" x 17" paper.

4) Measure the length of the copied scale image.

(When a 100mm scale is used as the original.)

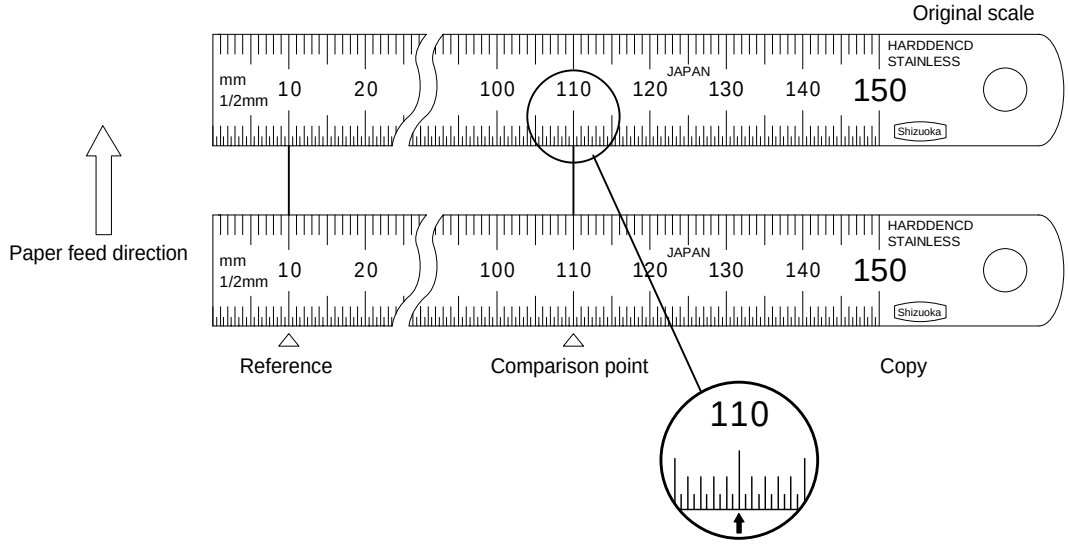

5) Calculate the vertical copy magnification ratio.

   Vertical copy magnification ratio = $\frac{\text{Copy image size}}{\text{Original size}}$ x 100 (%)

6) Check that the actual copy magnification ratio is within the specified range (100 ±0.8%).
   If it is out of the specified range, perform the following procedures.

7) Execute simulations 48-1. (C → 0 → 0 → C → 48 → CB → 1 → CB)
   The set vertical copy magnification ratio will be displayed in the COPIES SELECTED display.

8) Enter a new vertical copy magnification ratio with the numeric key and press PRINT button. The above procedure changes the lens home position and the vertical copy magnification ratio.
   When the copy magnification ratio is set to a larger value, the actual copy magnification ratio becomes larger.
   When the copy magnification ratio is set to a smaller value, the actual copy magnification ratio becomes smaller.

Repeat procedures 1) to 8) until the vertical copy magnification ratio in the normal (100%) copy mode is within the specified range.

b. Vertical copy magnification ratio adjustment (Zoom copy)

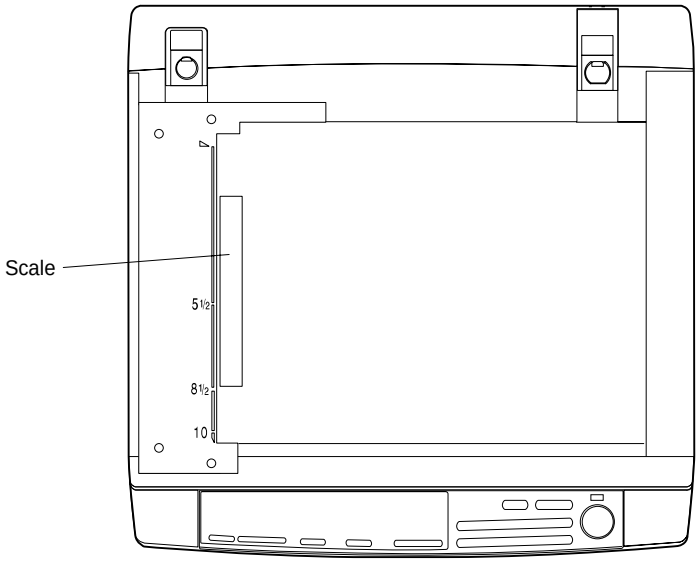

1) Set a scale vertically on the document table as shown below: (Use a long scale for precise adjustment.)

2) Set the copy magnification ratio to the max. level.

3) Make a copy on A4 or 8 1/2" x 11" paper.

4) Measure the length of the copied scale image.

5) Calculate the vertical copy magnification ratio.

   Vertical copy magnification ratio = $\frac{\text{Copy image size}}{\text{Original size}}$ x 100 (%)

6) Check that the actual copy magnification ratio is within the specified range (129 ±0.9%).
   If it is out of the specified range, perform the following procedures.

7) Execute simulations 26-8. (C → 0 → 0 → C → 26 → CB → 8 → CB)
   The set vertical copy magnification ratio in the zoom copy mode will be displayed in the COPIES SELECTED display.

8) Enter a new vertical copy magnification ratio with the numeric key and press PRINT button. The above procedure changes the lens shift ratio and the vertical copy magnification ratio in the zoom copy mode.
   When the copy magnification ratio is set to a larger value, the actual copy magnification ratio becomes larger.
   When the copy magnification ratio is set to a smaller value, the actual copy magnification ratio becomes smaller.

Repeat procedures 1) to 8) until the vertical copy magnification ratio in the zoom copy mode is within the specified range.

VII. Troubles caused by improper adjustment

c. Horizontal copy magnification ratio adjustment (Zoom copy)

I. Summary

The horizontal copy magnification ratio adjustment must be performed in the document table copy mode. In the document table copy mode, scanning speed is changed with simulations 48-2 to adjust the horizontal copy magnification ratio.

II. Purpose

The purpose of this adjustment is to fit the displayed copy magnification ratio with the actual copy magnification ratio.

III. Note

Before performing this adjustment, the following adjustments must have been completed. If not, this adjustment cannot be performed properly.

- ⁎ Image distortion adjustment
- ⁎ Focus adjustment
- ⁎ Vertical copy magnification adjustment

IV. Cases when the adjustment is required

1) When the lens and the mirror unit are disassembled or the part is replaced.
2) When the scanner unit drive section is disassembled or the part is replaced.
3) When the main PWB is replaced.
4) When the RAM in the main PWB is replaced.
5) When "U2" trouble occurs.
6) When the copy image distortion adjustment is performed.
7) When the center position of copy image is adjusted.
8) When the focus is adjusted.

V. Necessary tools

- ⁎ Screwdriver (+)
- ⁎ Scale

VI. Adjustment procedure

1) Set the scale on the document table as shown below. (Use a long scale for precise adjustment.)

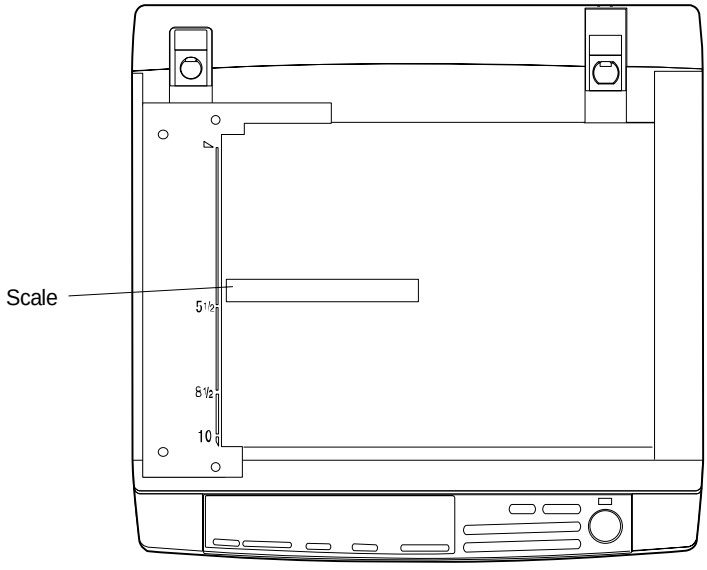

2) Set the copy magnification ratio to 100%.
3) Make a copy on A3 or 11" x 17" paper.
4) Measure the length of the copied scale image.

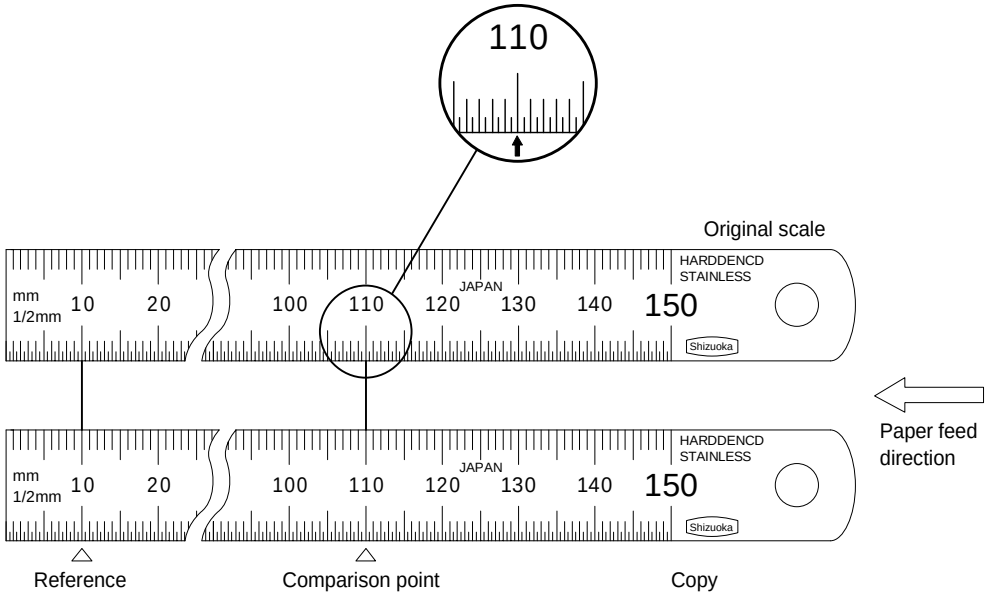

5) Calculate the horizontal copy magnification ratio.

   Horizontal copy magnification ratio = $\frac{\text{Copy image size}}{\text{Original size}}$ x 100 (%)

6) Check that the actual copy magnification ratio is within the specified range (100 ±0.8%).
   If it is out of the specified range, perform the following procedures.
7) Execute simulations 48-2. (C → 0 → 0 → C → 48 → CB → 2 → CB)
   The set horizontal copy magnification ratio will be displayed in the COPIES SELECTED display.
8) Enter a new horizontal copy magnification ratio with the numeric key and press PRINT button. The above procedure changes the lens home position and the horizontal copy magnification ratio.
   When the copy magnification ratio is set to a larger value, the actual copy magnification ratio becomes larger.
   When the copy magnification ratio is set to a smaller value, the actual copy magnification ratio becomes smaller.

Repeat procedures 1) to 8) until the horizontal copy magnification ratio in the normal (100%) copy mode is within the specified range.

VII. Troubles caused by improper adjustment

(7) Uniformity adjustment

I. Summary
The uniformity adjustment is performed by changing the exposure plate position attached to No.1 scanner unit.
The above procedure changes the balance of light quantity radiated onto the document.

II. Purpose
The purpose of this adjustment is to have uniform copy density.

III. Note
When this adjustment is performed, the exposure will be changed. Therefore, the copy density adjustment must be performed after this adjustment. Also, this adjustment must be performed always before the copy density adjustment.

IV. Cases when the adjustment is required

1) When the reflector is replaced.
2) When the copy lamp is replaced.
3) When the exposure adjustment plate is disassembled or replaced.
4) In maintenance

V. Necessary tools

∗ Screwdriver (+)
∗ A4 or 8 1/2" x 11" paper
∗ Half-tone paper of A4 or 8 1/2" x 11" or larger

VI. Adjustment procedure

1) Set a half-tone paper of A4 or 8 1/2" x 11" on the document table.
2) Set the exposure level to the min. level in the photo mode, and make a copy on A4 or 8 1/2" x 11" paper.
3) Check the uniformity. If there is any unevenness, perform the following procedures.
4) Move the exposure adjustment plate of the lighter copy section towards Y or move the exposure adjustment plate of the darker copy section towards X.

(Example)
If a copy shown below is made, move the front frame side of the sub exposure adjustment plate in the direction of X to adjust the exposure balance.

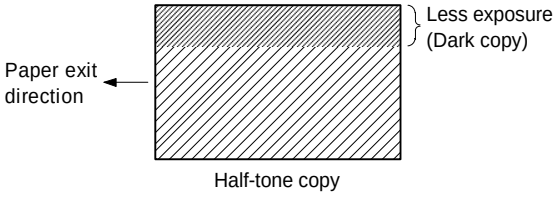

[Fig. 1]

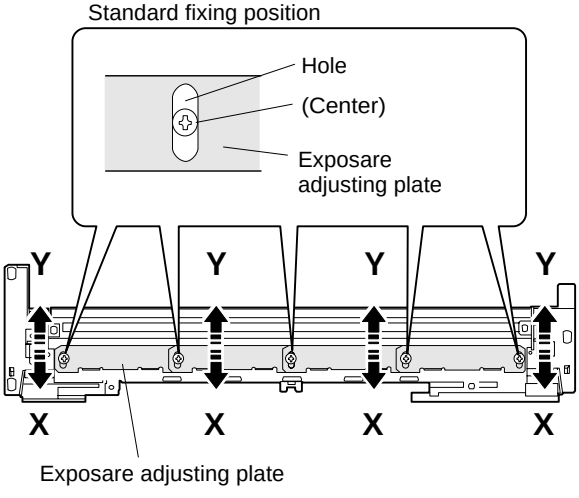

5) Make a copy in the same manner as procedure 2), and check the uniformity.
Repeat procedures 1) to 5) until proper uniformity is obtained.

VII. Troubles caused by improper adjustment

(8) Image loss/void area adjustment

The image loss/void area adjustment is performed by the combination of the copied image position adjustment on the copy paper and the void area adjustment.
Since the image loss and the void area are closely related each other, they must be adjusted simultaneously.
(Definitions of image loss and void area)
Void area: Empty (white) area on a copy paper (without toner on it)
Image loss: The quantity (length) of an image lost on a copy paper.

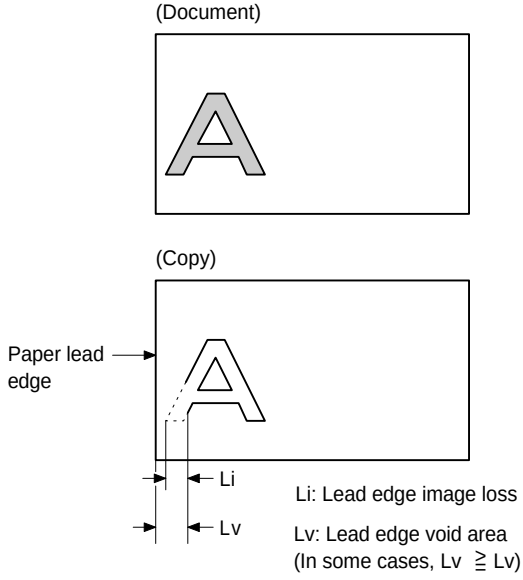

a. Copy image position adjustment

I. Summary
In order to adjust the copy image position on a copy paper, the lead edge position of an image on the photoconductor for the lead edge position of a document on the document table is changed with simulations 50-1, and the relative position of the paper to the image position on the photoconductor is changed.
In the models which have no zoom copy functions, however, the lead edge position of an image on the photoconductor for the lead edge position of a document on the document table is not changed.
The relative position of the paper is changed at OFF timing of the scanner home position sensor after starting scanning to adjust the copy image position on the paper.
After adjusting the copy image position with the above procedure, the M.C grid OFF timing for the lead edge position of an image on the photoconductor is changed with simulations 45-1 to adjust the void area.

II. Purpose
The purpose of this adjustment is to improve separation in the photoconductor section and in the fuser section and reduce dirt on the fuser section pawl by obtaining the max. effective copy area and the paper void area.

III. Note
If the proper void area is not obtained, the separation ability in the photoconductor section may be degraded and dirt on the fuser section pawl may be increased.
Before performing this adjustment, the following adjustments must have been completed. If not, this adjustment cannot be performed properly.

∗ Adjustment of paper pressure against the resist roller
(Sim 51-2 set value must be properly set.)

IV. Cases when the adjustment is required

1) When the optical section is disassembled or its part is replaced (including the scanner home position sensor).
2) When the main PWB is replaced.
3) When the RAM in the main PWB is replaced.
4) When "U2" trouble occurs.
5) When the resist roller unit is disassembled or replaced.
6) When the blank lamp is replaced.

V. Necessary tools

- Screwdriver
- Scale
- Test chart

(Copy image position adjustment)

1) Execute simulations 45-1. (C → 0→ 0 → 45 → CB → 1 → CB)
   Simulations 45 is to adjust the size of the void area in the lead edge of the copy paper.
   The set adjustment value is displayed on the COPIES SELECTED display.
2) Set the set value of simulations 45-1 to "0."
   Enter "0" with the numeric key and press PRINT button.
3) Execute simulations 50-1. (C → 0 → 0 → C → 50 → CB → 1 → CB)
   This simulation adjusts the copy image position for the paper. One of the set adjustment values is displayed on the COPIES SELECTED display.

   Adjustment value A: Corresponds to the time interval from the scanner unit starting and the scanner home position sensor OFF to reaching at the lead edge of the document. That is, this is the value used to determine the optical document lead edge reference position, and it must be fit with the edge section of the document reference plate.
   If this value is improper, when the copy magnification ratio is changed, the copy image lead edge position for the copy paper edge will fluctuate. (Does not exist in the models which have no zoom copy functions.)

   Adjustment value B: Corresponds to the time interval from the scanner unit starting and the scanner home position sensor OFF to the resist roller ON.
   According to this value, the paper feed timing for the image on the photoconductor drum is changed and the copy image position on the copy paper is also changed.
   When the set value is changed by "1," the position of the copy image on the copy paper is changed by about 0.123 mm.
   When the set value is made greater, the copy image position for the copy paper moves backward. When the set value is made greater, the copy image position for the copy paper moves forward.

   Use the paper tray select key to select the display of adjustment value A, adjustment value B, and to select the set mode.

Display lamp	Display content/set mode
Copier tray cassette paper feed lamp ON.	Adjustment value A
Copier tray cassette paper feed lamp BLINKS.	Adjustment value B

4) Set adjustment value A, adjustment value B to "0."
   Enter "0" with the numeric key and press PRINT button.
5) Press the scale onto the document alignment plate and set it horizontally as shown below:
6) Execute simulations 50-1 to make several copies at each of 129% and 64%.

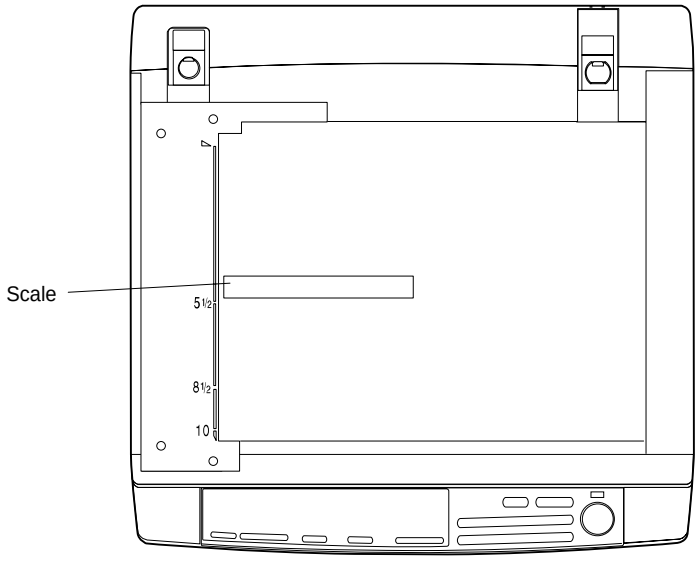

7) Measure the distance from the paper lead edge to the copy image lead edge of each copied papers, and calculate the average value.

   L1: Average distance (mm) from 129% copied paper lead edge to the copy image lead edge

   L2: Average distance (mm) from 64% copied paper lead edge to the copy image lead edge

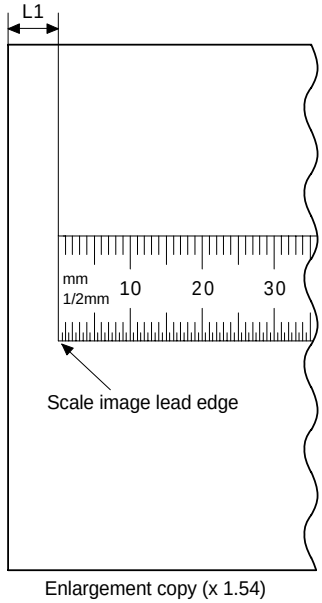

Enlargement copy (x 1.54)

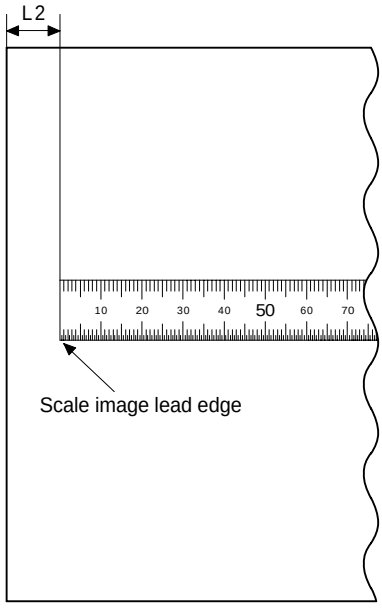

Reduction copy (x 0.64)

8) Enter the measure values in procedure 7) into the formula below to calculate adjustment value A and adjustment value B.
   A = 8.2423 x (L1 – L2)
   B = 16.0568 x L2 – 7.9661 x L1
9) Set the adjustment values obtained in procedure 8).
10) Execute simulations 50-1 to make several copies at each of 129% and 64%.
11) Measure the distance from the paper lead edge to the copy image lead edge of each copied papers (129% and 64%), and calculate the average value.
12) Check that the difference between the distance from the copy paper lead edge to the copy image lead edge of 129% copy and that of 64% copy is in the range of 0 ± 1.0 mm.
   If the difference is out of the above range, change adjustment value A and repeat procedures 10) and 12) until the difference is within the above range.
   If adjustment value A is improper, the copy image lead edge position fluctuates in proportion to the copy magnification ratio.

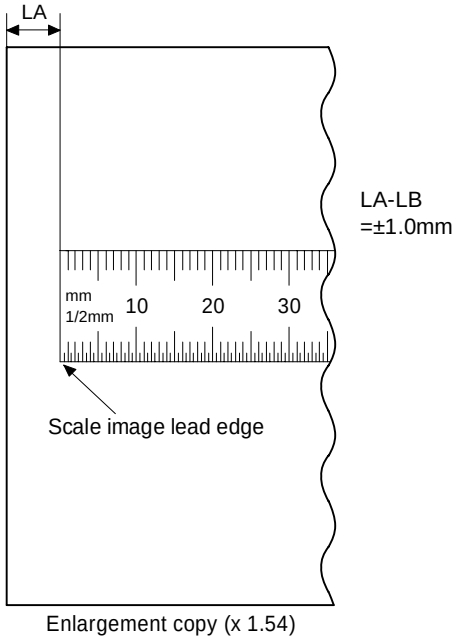

Enlargement copy (x 1.54)

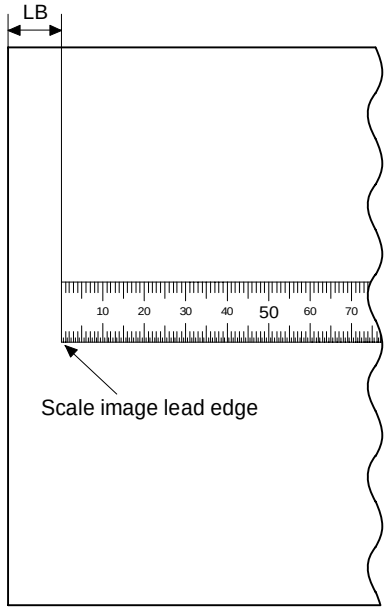

Reduction copy (x 0.64)

13) Make a 100% copy, and check that the copy image lead edge is in the range of 0 ±1.5 mm from the paper lead edge position reference.
   If it is out of the above range, change adjustment value B and repeat procedure 13) until it is within the above range.

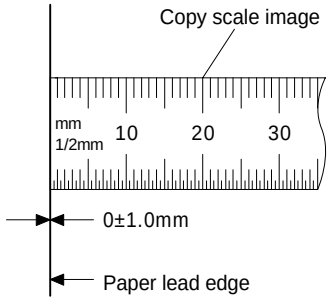

b. Void area adjustment

I. Summary

The copy image position on the copy paper is adjusted with simulations 50-1, then the main corona grid ON timing for the image lead edge on the photoconductor is changed with simulations 45 to adjust the lead edge void area.

In concrete, in the case of the document table mode, the adjustment is performed by changing the time interval from the scanner motor ON to the main corona grid ON. In the case of the SPF mode, the adjustment is performed by changing the time interval from the SPF resist roller ON to the main corona grid ON.

On the other hand, the rear edge void is adjusted by varying the OFF timing of the main corona grid after the PPD detects the rear edge of paper and turns off.

There are two kinds of the rear edge void adjustment. One is in the tray paper feed mode, and the other is in the manual paper feed mode.

Selection of the adjustment mode is made by the paper feed unit select button and the display lamp.

Mode	Paper tray	Manual Paper feed unit lamp
Lead edge void amount adjustment mode	Light	—
Read edge void amount adjustment mode (Tray feed)	Blink	—
Read edge void amount adjustment mode (Manual paper feed)	—	Blink

II. Purpose

The purpose of this adjustment is to improve separation in the photoconductor section and in the fuser section and reduce dirt on the fuser section pawl by obtaining the max. effective copy area and the proper void area.

III. Note

If the proper void area is not obtained, the separation ability in the photoconductor section may be degraded and dirt on the fuser section pawl may be increased.

Before performing this adjustment, the following adjustment must have been completed. If not, this adjustment cannot be performed properly.

- ⁎ Adjustment of paper pressure against the resist roller (Sim 51-2 set value must be properly set.)
- ⁎ Adjustment of copy image position (Sim 50-1, A, B)

IV. Cases when the adjustment is required

1) When the optical section is disassembled or its part is replaced (including the scanner home position sensor).
2) When the main PWB is replaced.
3) When the RAM in the main PWB is replaced.
4) When "U2" trouble occurs.
5) When the resist roller unit is disassembled or replaced.

V. Necessary tools

- ⁎ Screwdriver
- ⁎ Scale
- ⁎ Test chart

VI. Adjustment procedure
(Lead edge void area adjustment)

1) Press the scale onto the document alignment plate and set it horizontally as shown below:

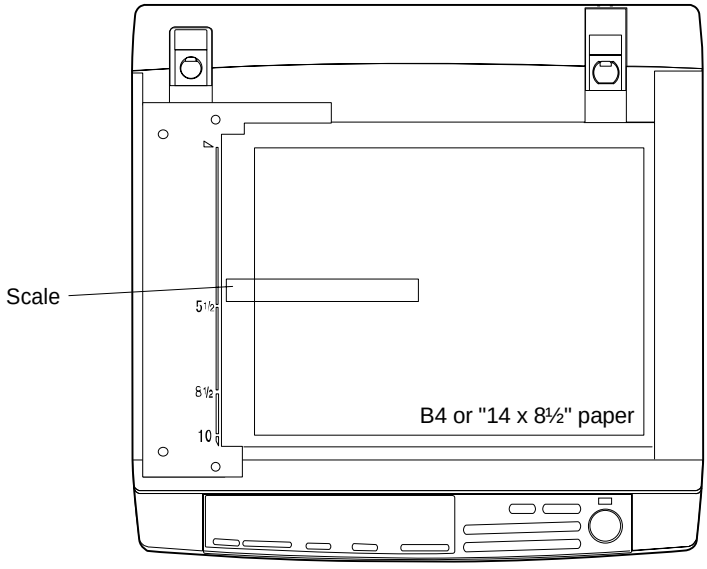

2) Execute simulations 45-1. (C → 0 → 0 → C → 45 → CB → 1 → CB)
Simulations 45-1 is to adjust the size of the void area in the lead edge of the copy paper.
The set adjustment value is displayed on the COPIES SELECTED display.
Press the paper feed unit select button to light the tray paper feed lamp and set the machine to the lead edge void adjustment mode.
3) Set the adjustment value to "99."
Enter "99" with the numeric key, and press PRINT button.
4) With the document cover open, make several copies at 100%.
5) Measure the lead edge void area of each copy.

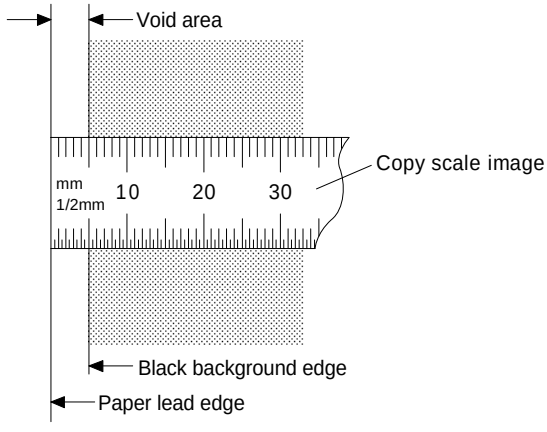

6) Calculate the average void area.
7) Calculate the void area adjustment value from the formula shown below.

$$\text{Current set value (99)} - \frac{\text{current void area (mm)}}{0.123}$$

= Adjustment value (Decimal point rounded)

8) Set the adjustment value obtained in procedure 7). (Decimal point rounded off)
9) With the document cover open, make several copies at 100%.
10) Measure the copy lead edge void area.

11) Measure the distance from the paper lead edge to the copy image lead edge of each copied papers (129% and 64%), and calculate the average value.
(Not required for the models without zoom functions.)

12) Check that the void area is within the specified range.

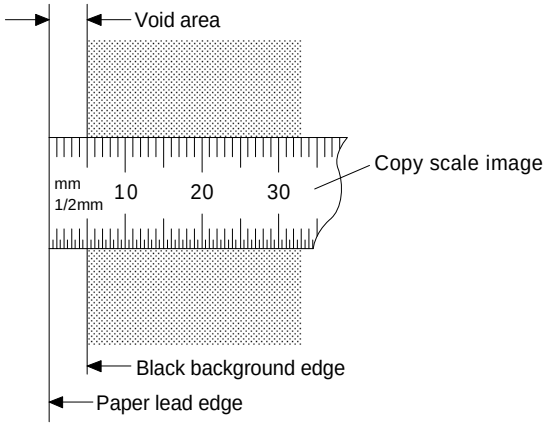

Standard:

0^{+3}_{-0} mm

If the void area is outside the specified range, change the set value of simulations 45 and repeat procedures 9) to 12).

When the set value is changed by "1," the void area is changed by about 0.123 mm.
When the set value is made greater, the void area becomes greater, and vise versa.

(End edge void area adjustment) Tray paper feed mode

1) Set a scale and A4 or 8 1/2" x 11" paper on the document table as shown below:

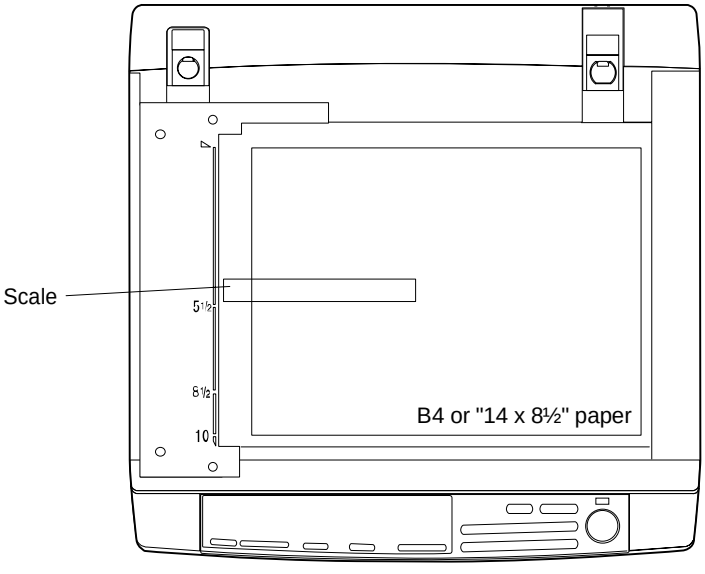

2) Execute simulations 45. (C → 0 → 0 → C → 45 → CB → 1 → CB)
The set adjustment value is displayed on the COPIES SELECTED display.
Press the paper feed unit select button to blink the cassette paper feed lamp and to set the machine to the end edge void adjustment mode in the cassette paper feed mode.

3) Set the adjustment value to "99."
Enter "99" with the numeric key, and press PRINT button.

4) With the document cover open, make several copies at 100%.

5) Measure the end edge void area of each copy.

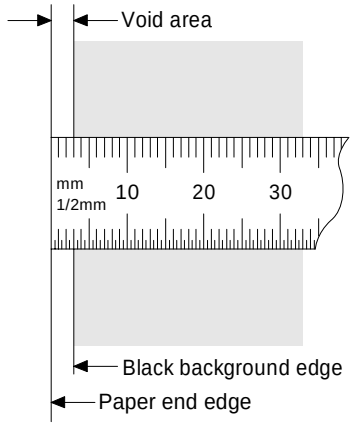

6) Calculate the average void area.

7) Calculate the void area adjustment value from the formula shown below.

Current set value (99) – $\frac{\text{current void area (mm)}}{0.123}$

= Adjustment value (Decimal point rounded)

8) Set the adjustment value obtained in procedure 7). (Decimal point rounded off)

9) With the document cover open, make several copies at 100%.

10) Measure the copy end edge void area.

11) Measure the distance from the paper end edge to the copy image lead edge of each copied papers (129% and 64%), and calculate the average value.

12) Check that the void area is within the specified range.

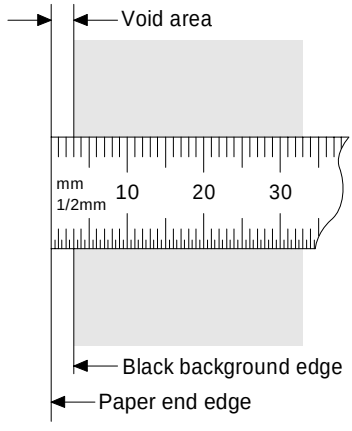

Standard:

1 ~ 3 mm

If the void area is outside the specified range, change the set value of simulations 45 and repeat procedures 9) to 12).

When the set value is changed by "1," the void area is changed by about 0.123 mm.
When the set value is made greater, the void area becomes greater, and vise versa.

(End edge void area adjustment) Manual paper feed tray mode

1) Press the paper feed unit select button to blink the manual paper feed lamp and to set the machine to the rear edge void adjustment mode in the manual paper feed mode.

2) Perform the end edge void adjustment in the manual paper feed mode similarly with the end edge void adjustment in the tray paper feed mode.

3. COPY DENSITY ADJUSTMENT

(1) Copy density adjustment timing

The copy density adjustment must be performed in the following cases:

- ✶ When in maintenance.
- ✶ When the high voltage unit output current or voltage is adjusted.
- ✶ When the developing bias voltage is adjusted.
- ✶ When the copy lamp is replaced.
- ✶ When the optical section is cleaned.
- ✶ When an optical part is replaced.
- ✶ When the optical section is disassembled.
- ✶ When the photoconductor drum is replaced.
- ✶ When the developer is replaced.
- ✶ When the AE sensor is replaced.
- ✶ When the main control PWB is replaced.
- ✶ When the EEPROM on the main control PWB is replaced.
- ✶ When the memory trouble (U2) occurs.
- ✶ When a part of the copy lamp control circuit is replaced.
- ✶ When the AC power source PWB is replaced.

(2) Note for copy density adjustment

1) Necessary procedures before adjustment

- ✶ Clean the optical section.
- ✶ Clean the AE sensor.
- ✶ Clean or replace the charger wire.
- ✶ Check that the high voltage section voltage and the developing bias voltage are in the specified range.

2) Note

- ✶ The auto mode copy density adjustment must be performed after the normal mode copy density adjustment. Never reverse the sequence.

(3) Necessary items for the copy density adjustment

- ✶ Test chart
  (Use one of the following three: UKOG-0162FCZZ, UKOG-0089CSZZ, KODAK GRAY SCALE)
- ✶ B4 (14″ × 8 1/2″) white paper

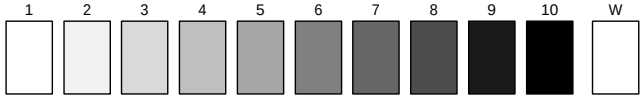

Test chart comparison

UKOG-0162FCZZ DENSITY No.	1	2	3	4	5	6	7	8	9	10	W
UKOG-0089CSZZ DENSITY No.	0.1		0.2		0.3				0.5	1.9	0
KODAK GRAY SCALE		1		2		3		4		19	A

SHARP CORPORATION
MADE IN JAPAN

(4) Copy density adjustment mode

The copy density adjustment must be performed in the following five mode:

Copy density adjustment mode			Exposure level		Sim No
Original table copy mode	Normal mode	Non-toner-save mode	1	5	46-1
		Toner save mode	1	5	
	Photo mode	Non-toner-save mode	1	5	
	Auto mode	Non-toner-save mode	1	5	
		Toner save mode	1	5	

(5) Copy density adjustment procedure

The copy density is adjusted by using Simulations 46 to change the exposure level and the copy lamp voltage in each copy mode.
The copy density adjustment must be performed in the five modes. To select each mode, use the copy mode select key.

A. Test chart (UK0G-0162FCZZ) setting

1) Set the test chart and B4 (14″ × 8 1/2″) white paper on the original table as shown below.
   The sensing area of the AE sensor is about 120 mm wide from the rear frame side edge on the original table glass. Place the white paper on that area, but keep the test chart away from that area.

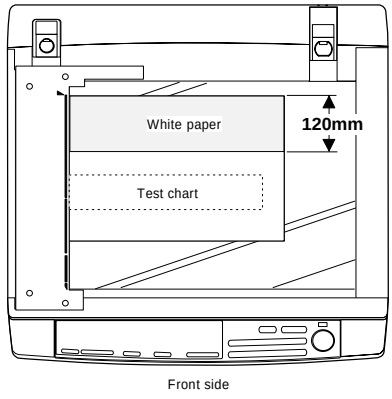

2) Close the document cover.
3) Execute Sim 47.
4) Cancel the Sim 47 after off the copy lamp.

B. Normal copy mode (Non-toner-save mode) copy density adjustment

1) Enter the simulations 46-1 mode.
2) Set the adjustment mode to the normal copy mode (Non-toner-save mode).
   (Press the copy mode select key to light the normal copy mode lamp.)

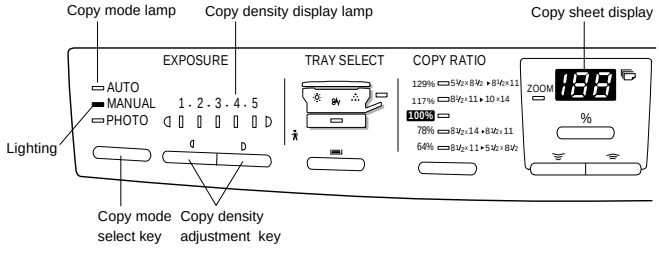

3) Set the density level to "1" with the copy density adjustment key. (The currently set copy lamp voltage level will be displayed on the COPIES SELECTED display.)

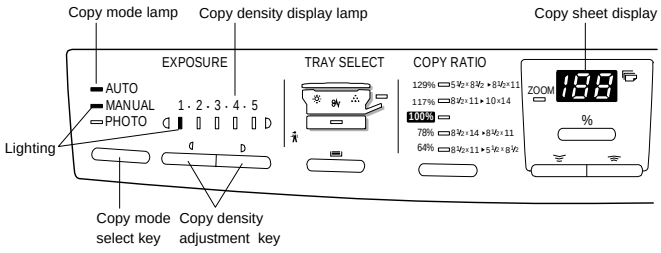

4) Press the print button to make a copy.
Check the gray scale copy to insure that "6" is slightly copied and "5" is not copied.
When the copy density is too dark, increase the copy lamp voltage level.
When the copy density is too light, decrease the copy lamp voltage level.
Enter a new set value of the copy lamp voltage level with the numeric keys and press the print button, then the entered value will be set and the copy density will be adjusted according to the set value.

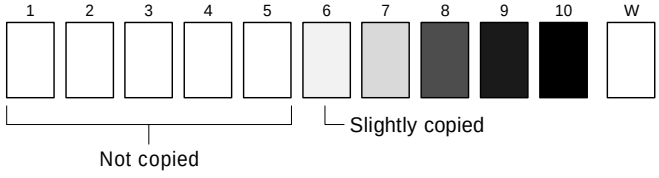

5) Set the copy density level to "5" with the copy density adjustment key.
(The currently set copy lamp voltage level will be displayed on the COPIES SELECTED display.)

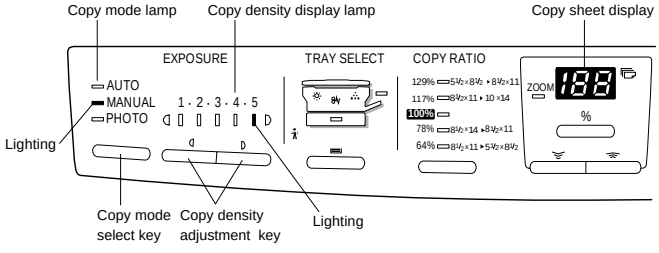

6) Press the print key to make a copy.
Check the gray scale copy to insure that "2" is clearly copied and "1" is not copied.
When the copy density is too dark, increase the copy lamp voltage level.
When the copy density is too light, decrease the copy lamp voltage level.
Enter a new set value of the copy lamp voltage level with the numeric keys and press the print button, then the entered value will be set and the copy density will be adjusted according to the set value.

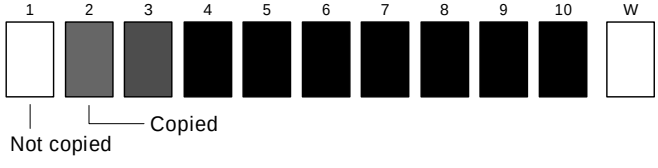

C. Normal copy mode (Toner save mode) copy density adjustment

1) Set the adjustment mode to the normal copy mode (Toner save mode). (Press the copy mode select key to light the normal copy mode lamp and the photo copy mode lamp.)

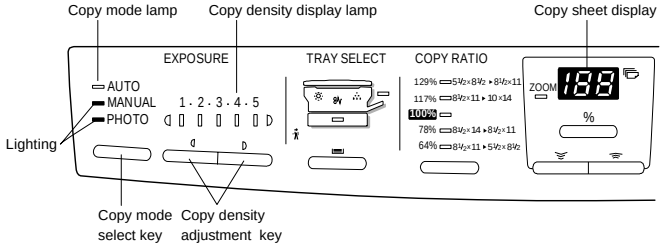

Adjust in the same manner as the above copy density adjustment procedures i the normal mode (Non-toner-save mode).

D. Photo copy mode (Non-toner-save mode) copy density adjustment

There is no toner save mode in the photo copy mode.

1) Set the adjustment mode to the photo copy mode.
(Press the copy mode select key to light the photo copy mode lamp.)

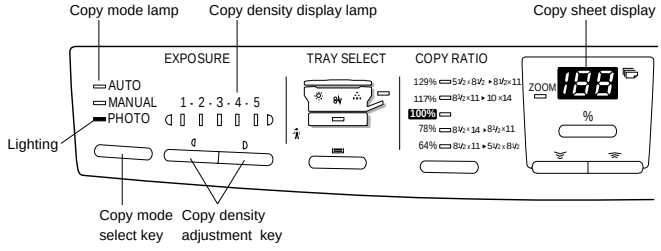

Check the gray scale copy to insure that "7" is slightly copied and "6" is not copied.
When the copy density is too dark, increase the copy lamp voltage level.
When the copy density is too light, decrease the copy lamp voltage level.
Enter a new set value of the copy lamp voltage level with the numeric keys and press the print button, then the entered value will be set and the copy density will be adjusted according to the set value.

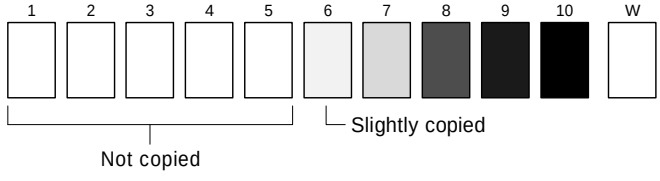

E. Auto copy mode (Non-toner-save mode) copy density adjustment

1) Set the adjustment mode to the auto copy mode (Non-toner-save mode). (Press the copy mode select key to light the auto copy mode lamp.)

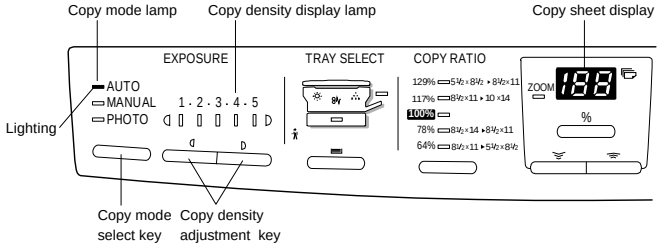

2) Set the density level to "1" with the copy density adjustment key. (The currently set copy lamp voltage level will be displayed on the COPIES SELECTED display.)

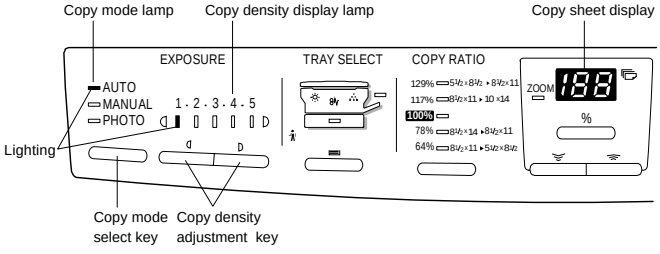

3) Set the copy lamp voltage level set value to "0."
Enter the new set value with the numeric key and press the print button, then the entered value will be set. (Be sure to set to "0.")

4) Set the copy density level to "5" with the copy density adjustment key.
(The currently set copy lamp voltage level will be displayed on the COPIES SELECTED display.)

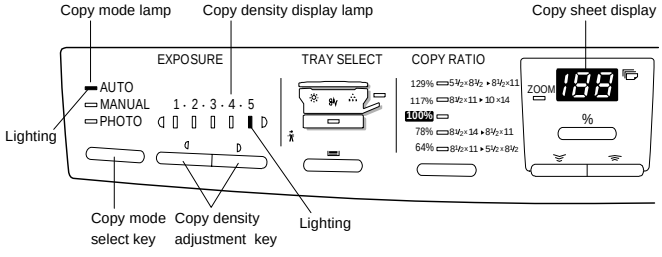

5) Press the print button to make a copy.
Check the gray scale copy to insure that "3" is slightly copied and "1" is not copied.
When the copy density is too dark, increase the copy lamp voltage level.
When the copy density is too light, decrease the copy lamp voltage level.
Enter a new set value of the copy lamp voltage level with the numeric keys and press the print button, then the entered value will be set and the copy density will be adjusted according to the set value.

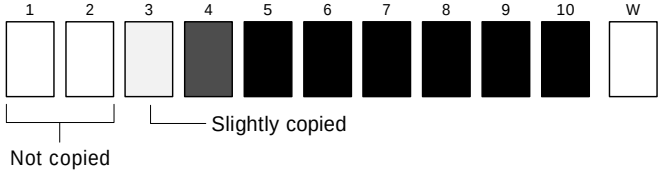

F. Auto copy mode (Toner save mode) copy density adjustment

1) Set the adjustment mode to the auto copy mode (Toner save mode).
(Press the copy mode select key to light the auto copy mode lamp and the photo copy mode lamp.)

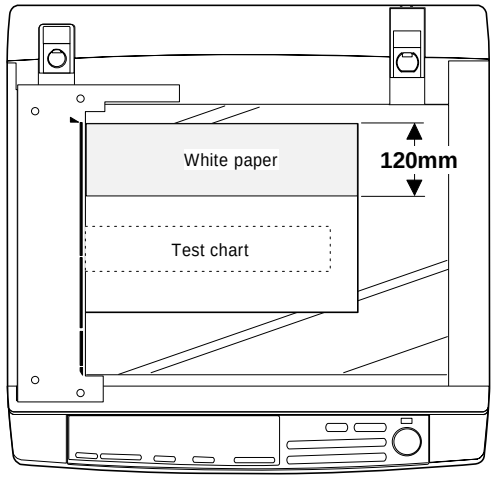

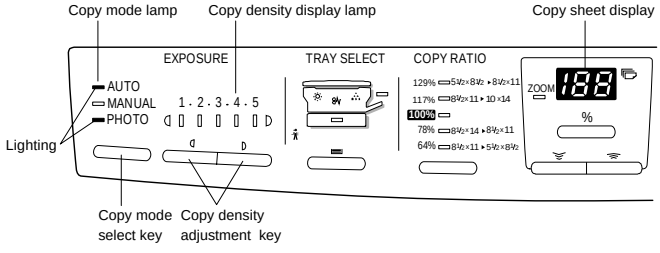

Adjust the copy density in the same manner as the Photo copy mode (Non-toner-save mode) copy density adjustment.

(6) Copy density adjustment table

A : Auto copy mode
P : Photo copy mode
N : Normal copy mode

N.TS : Non-toner-save mode
TS : Toner save mode

Copy mode		Mode display	Density level	Test chart copy density
Normal	N.TS	N	1	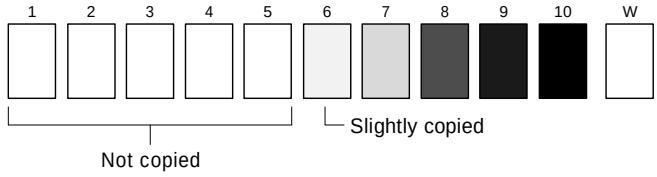
			5	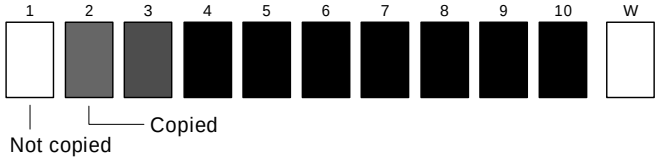
	TS	N & P	1	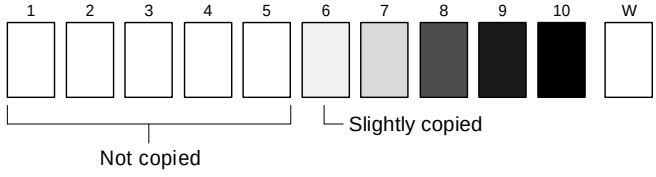
			5	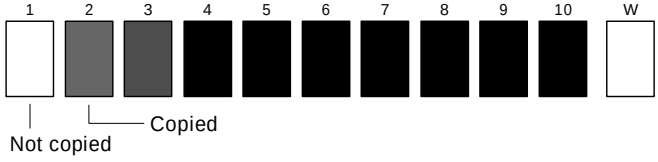
Photo	N.TS	P	1	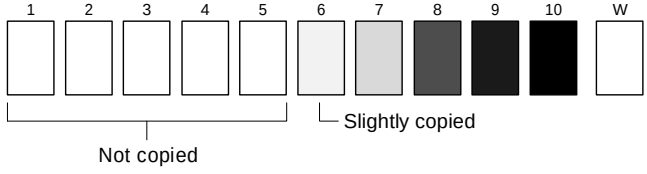
			5	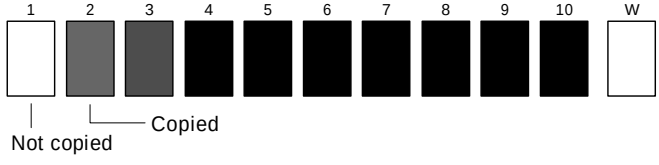
Auto	N.TS	A	1	
			5	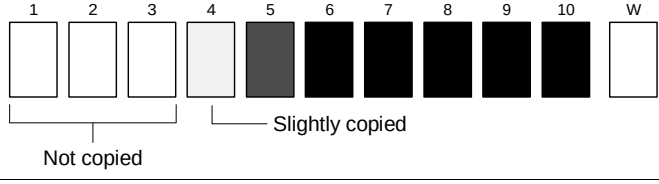
	TS	A & P	1	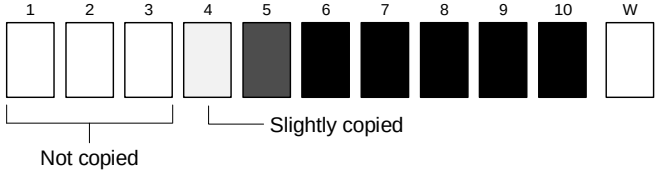
			5	

4. Others

(1) Transfer charger wire installation

Install the transfer charger wire as shown below. (Clean the charger wire at every 40K copies and replace it at every 80K copies.)
Transfer charger unit (TC unit)

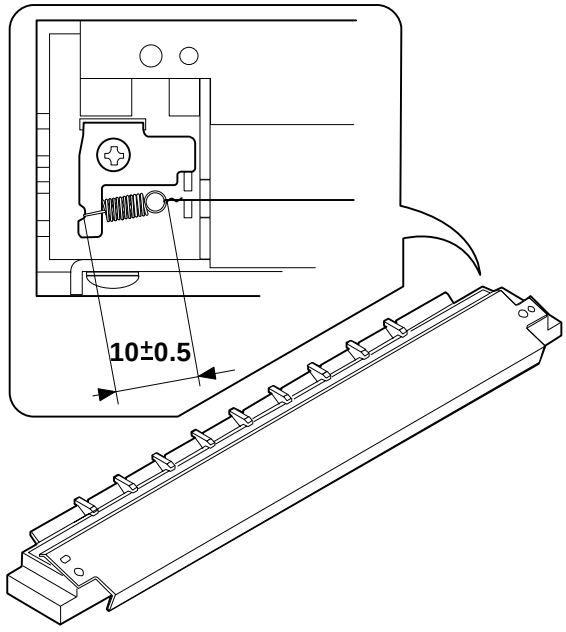

(Note for replacement of the charger wire)

ⓐ Do not twist or deform the charger wire.

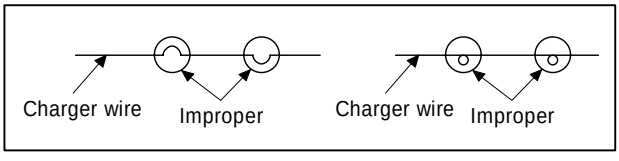

ⓑ After replacement, be sure to clean the charger wire with alcohol. (Be sure to use alcohol only.)

ⓒ After wiping with alcohol, wipe with a dry cloth.

ⓓ Use charger wire of 70μ (DWIR-0466CSZZ).

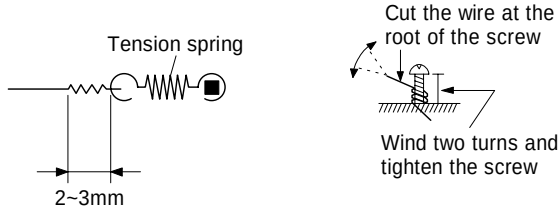

(2) How to adjust the separation corona voltage

1) Install the developer unit and OPC drum unit into the main body.
2) Set the hight voltage probe (1000:1) to digital multimeter.
3) Set the digital multimeter range to DC V.
4) Connect the digital multimeter to the SHVG check pin on the lower unit control PWB and chassis GND.
5) Execute simulation 8-7 and adjust the separation corona voltage to 3.5 ± 0.35v by rotates VR1 on the lower unit control PWB. (SHVG turns on 30 sec)

(3) How to adjust the developing bias voltage

1) Install the developer unit and OPC drum unit into the main body.
2) Set the digital multimeter range to DC 500V.
3) Connect the digital multimeter to the developing bias output terminal on the lower unit control PWB and chassis GND.
4) Execute simulation 8-1 and adjust the developing bias voltage to –200 ± 3v by rotates VR2 on the lower unit control PWB. (Developing bias turns on 30sec)

CORONA VOLTAGE IN THE EACH COPY MODE

COPY MODE		MAIN CORONA UNIT		TRANSFER CORONA VOLTAGE (V)	SEPAREATION CORONA VOLTAGE (V)
		MAIN CORONA VOLTAGE (V)	MAIN CORONA GRID VOLTAGE (V)		
N.T.S	NORMAL	–5.3Kv	780	–5.3Kv	+2.7Kv
	AE	–5.3Kv	780	–5.3Kv	+2.7Kv
	PHOTO	–5.3Kv	478	–5.3Kv	+2.7Kv
T.S	NORMAL	–5.3Kv	660	–5.3Kv	+2.7Kv
	AE	–5.3Kv	660	–5.3Kv	+2.7Kv

[8] SIMULATIONS

1. Outline

This model is equipped with the simulations feature which allows the following operations with the keys on the operation panel:

1) Adjustments
2) Setting of specifications and functions
3) Resetting trouble codes
4) Checking operations

2. Purpose

The purpose of the simulations feature is to improve serviceability in repairs and adjustments.
Since the mechanical adjustments can be performed electrically, the above purpose is achieved with low costs.

3. Operating procedure

Simulations operating procedure

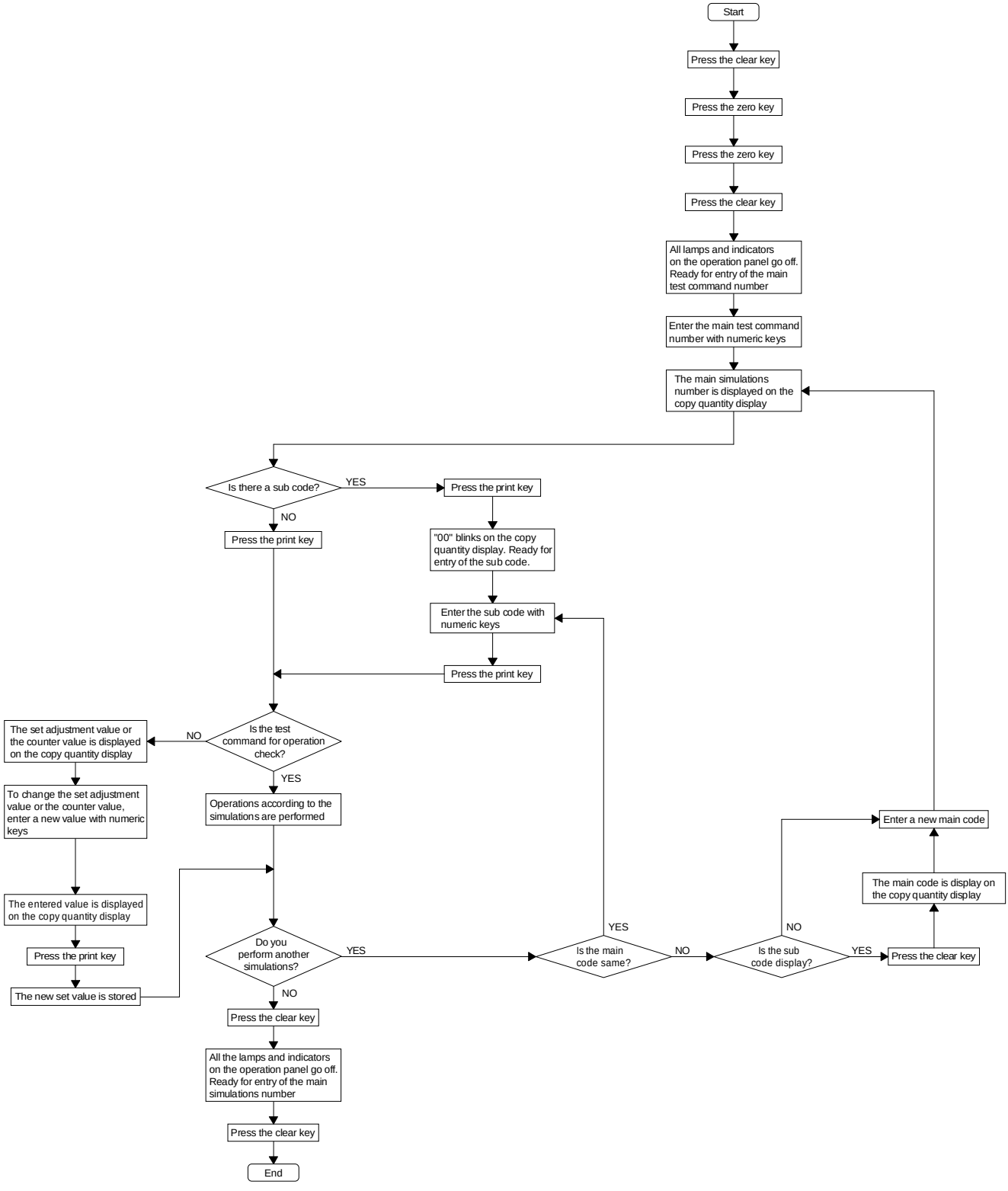

4. Purpose list

Purpose	Section	Main	Sub	Function	Ref. page
Adjustments	Paper feed section	51	2	Resist amount adjustment	8-3
	Optical section	26	8	Copy magnification ratio adjustment (zooming)	
		45	1	Lead edge void amount setting	
		46	1	Copy density (exposure level) adjustment	8-4
		47		AE sensor characteristics value data auto input	8-5
		48	1	Front-rear direction magnification ratio adjustment (Vertical direction)	
			2	Paper transport direction magnification ratio adjustment (Horizontal direction)	
		50	1	Lead edge image position adjustment	8-6
	Developer	8	1	Developing bias voltage check	
		25	2	Auto developer adjustment	
	Process	8	2	MC/TC output check (Normal mode)	8-7
			3	MC/TC output check (Photo mode)	
			4	MC/TC output check (Toner save mode)	
			7	Separation charger (SC)	
			9	MC/TC/SC output check	
	SPF	48	4	Exposure correction in enlargement copy of 120% or more	8-5
		51	2	Resist quantity adjustment	8-3
Setting	Specifications	26	6	Destination setting	8-7
			30	CE standards setting	
	Paper feed section	26	12	Manual copy mode setting	8-8
	Fuser section	26	13	Main motor operation mode setting at warming up	
		43	1	Fuser temperature setting	
			2	Fuser temperature setting (in power save)	
	Process	44	1	Correction mode setting	
Counter	Maintenance counter	20	1	Counter value reset	8-9
		21	1	Maintenance cycle setting	
		22	2	Maintenance cycle display	
		22	1	Counter value display	
	Drum counter	24	7	Counter value reset	
		22	12	Counter value display	
	Developer counter	42	1	Counter value reset	
		22	6	Counter value display	
	Total counter	0 Key (Does not enter the simulation mode.)		Counter value display	—
Operation check	General (Aging mode)	7	1	Warm-up time display and aging	8-12
			4	Omitting warm-up	
			6	Intermittent operation aging	
	Paper feed section	30	1	Main body sensor operation check	8-9
			2	Option tray sensor operation check	
	Optical section	1	1	Mirror base scan operation check	8-10
			2	Optical system sensor operation check	
			3	Lens operation check	
			4	Lens operation aging	
		5	3	Copy lamp lighting operation	
	Operation panel	5	1	LED lighting check	
	Fuser section	5	2	Heater lamp lighting check	
	Process	5	4	Discharge lamp lighting check	
			5	Blank lamp lighting check	
		6	2	Separation pawl auto operation check	
		44	2	Optical system dirt correction reference value display	8-11
			3	Optical system dirt correction voltage correction value display	
			4	Photoconductor drum rotation time display	
	Developer section	10		Toner motor auto operation check	
		25	1	Toner density sensor operation check/toner density monitor	
Trouble cancel		14		Cancel of troubles other than U2	
		16		U2 trouble cancel	

5. Details of simulations

<table>
<tr><th rowspan="2">Purpose/kind</th><th rowspan="2">Section</th><th colspan="3">Contents</th><th rowspan="2">Ref. page</th></tr>
<tr><th>Main code</th><th>Sub code</th><th>Description</th></tr>
<tr><td rowspan="4">Adjustment</td><td rowspan="2">Paper feed section</td><td rowspan="2">51</td><td rowspan="2">2</td><td>Used to adjust contact pressure between paper and the main body resist roller. (Amount of paper buckle at the resist roller)
Change the set value when the shift between the paper and the image varies.</td><td rowspan="2"></td></tr>
<tr><td>(Operation/procedure)
When the simulation key operation is performed, the currently set value is displayed on the COPIES SELECTED display.
Enter the set value with the numeral key and press the print button, and the entered set value will be stored in the main PWB RAM.
The standard set value is 25.
Tray paper feed mode: Tray paper feed lamp ON
Manual paper feed mode: Manual paper feed lamp ON
The set value corresponds to the time interval between when the paper detector (PPD/SPPD) in front of the main body resist roller detects paper and when the transport roller (TRC/SPFC) turns off.
The greater this time interval is, the greater the contact pressure between the paper and the resist roller is.
 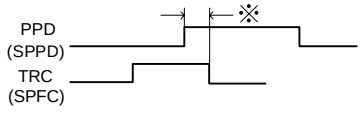

※ The time interval can be set. The greater the time interval is, the greater the contact pressure between the paper and the resist roller is. If the contact pressure is too great, a paper jam may occur. If the contact pressure is too small, variations of image position for the copy paper becomes greater. This must be adjusted according to the paper quality.</td></tr>
<tr><td rowspan="2">Optical unit</td><td rowspan="2">26</td><td rowspan="2">8</td><td>Used to adjust the copy magnification ratio in zoom copy.
The lens shift amount in zoom copy is changed to provide suitable magnification ratio.
There is a slight variation in each lens focal distance. If the lenses are shifted in a same amount in zoom copy, suitable magnification ratio may not be obtained. To correct this, therefore, each lens is shifted according to its focal distance.
The lens must be shifted in accordance with its focal distance in zoom copy,</td><td rowspan="2">7-16</td></tr>
<tr><td>(Operation/Procedure)
When the simulation key operation is performed, the currently set lens number is displayed.
Enter the lens number with the ready lamp ON and press the print button, and the entered number will be stored in the main PWB RAM. The lens number is in proportion to the lens focal distance.</td></tr>
<tr><td rowspan="2"></td><td rowspan="2">45</td><td rowspan="2">1</td><td>Used to adjust the copy paper lead edge void and the rear edge void amount.</td><td rowspan="2">7-19</td></tr>
<tr><td>(Operation/procedure)
When the simulation key operation is performed, warming-up operation is performed. After completion of warming up, the currently set void amount is displayed on the COPIES MADE display.
Use the tray select key to select between the lead edge void amount adjustment and the rear edge void amount adjustment mode. The upper tray lamp will change as shown in the table below.
<table>
<tr><th>Mode</th><th>Paper cassette lamp</th><th>Manual Paper feed lamp</th></tr>
<tr><td>Lead edge void amount adjustment mode</td><td>Light</td><td>—</td></tr>
<tr><td>Read edge void amount adjustment mode (Paper tray)</td><td>Blink</td><td>—</td></tr>
<tr><td>Read edge void amount adjustment mode (Manual Paper feed)</td><td>—</td><td>Blink</td></tr>
</table>
Enter the set value with the numeral keys and press the PRINT button, and the set value will be stored.
The standard set value is 50. The void area increases 0.123mm for an increase of the set value by 1.</td></tr>
</table>

Purpose/kind	Section	Contents			Ref. page
		Main code	Sub code	Description	
Adjustment	Optical unit	46	1	Used to adjust the copy density (exposure level) and the copy density gradient (exposure gradient) in each copy mode. The exposure level is changed by changing the copy lamp applying voltage. The adjustment points are exposure levels "1" and "5" in each copy mode. The copy density (exposure level) and the copy density gradient (exposure gradient) can be adjusted arbitrarily.	7-26

(Operation/procedure)
When the simulation key operation is performed, the currently set exposure level will be displayed on the COPIES SELECTED display.
Select exposure level "1" or "5" with the copy density adjustment key, and enter the set value with the numeral keys and press the print button. Then the set value is stored.
To select each copy mode, use the copy mode key.

Copy density adjustment mode			Exposure level		Sim No
Original table copy mode	Normal mode	Non-toner-save mode	1	5	46-1
		Toner save mode	1	5	
	Photo mode	Non-toner-save mode	1	5	
	Auto mode	Non-toner-save mode	1	5	
		Toner save mode	1	5	

Copy density level (exposure level (copy lamp applying voltage) to operation panel density display level)

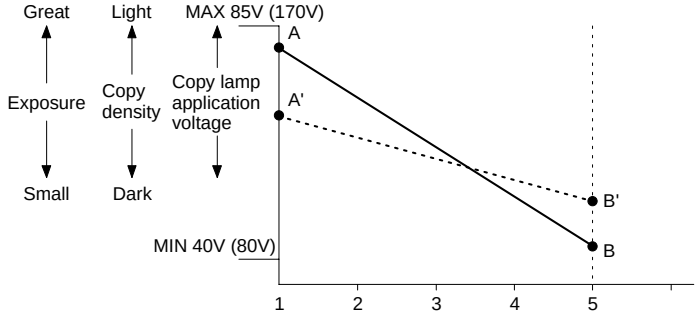

In the manual copy mode and the photo copy mode
Set point A (exposure level (copy lamp applying voltage) at copy density level "1") and point B (exposure level (copy lamp applying voltage) at copy density level "5"), and the exposure gradient (copy density gradient) and the exposure level (copy density level) will be set.
A – B characteristic: A great exposure gradient (copy density gradient).
A′ – B′ characteristic: A small exposure gradient (copy density gradient).
Point A and point B can be set arbitrarily.

Purpose/kind	Section	Contents			Ref. page
		Main code	Sub code	Description	
Adjustment	Optical unit	47		Used to store the characteristics of the AE sensor and the optical section for the change in the copy lamp applying voltage. The exposure level in the auto copy mode is automatically determined by the stored data and the document density. This simulation is used to correct the output characteristics of the AE sensor output characteristics, which differ in different machines. 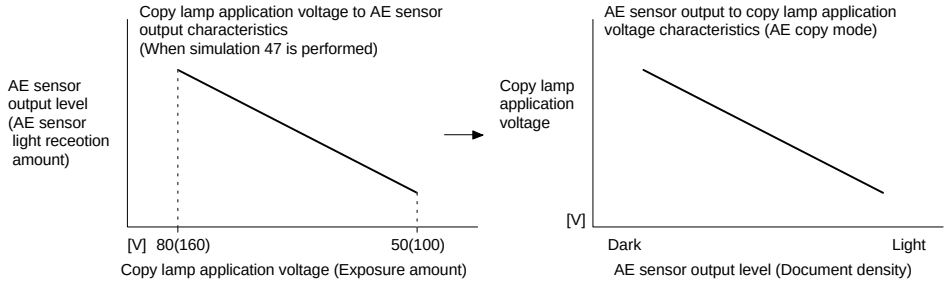 (Operation/procedure) When the simulation key operation is performed, the scanner unit performs initializing and feeds about 10cm and stops. When the print button is pressed again, the copy lamp applying voltage changes from 80V (160V) to 50V (100V) by the increment of 5V. The AE sensor output characteristics at that time are stored in the main PWB RAM. At that time, the AE sensor gain is automatically adjusted. This operation must be performed before the copy density adjustment in the auto copy mode.	7-26
		48	1	Used to adjust the vertical (Machine front to rear) copy magnification ratio. The adjustment is performed by changing the lens home position arbitrarily. (Operation/procedure) When the simulation key operation is performed, the currently set value is displayed on the COPIES SELECTED display. Enter the adjustment value with the numeric key and press the print button, and the value will be stored in the main PWB RAM. It is required to make a copy and adjust. However, the rough input value can be obtained from the following formula: Input value = Current set value + Magnification ratio correction rate × 10	7-15
			2	Used to adjust the horizontal magnification ratio.(Lead to Trail) The adjustment is performed by changing the scanning speed of the scanner (mirror motor). (Operation/procedure) When the simulation key operation is performed, the currently set value is displayed on the COPIES SELECTED display. Enter the adjustment value with the numeric key and press the print button, and the value will be stored in the main PWB RAM. It is required to make a copy and adjust. However, the rough input value can be obtained from the following formula: Input value = Currently set value + copy magnification ratio x 10 Copy magnification ratio = (Document length – Copy image length) ÷ Document length x 100 [%]	7-16
			4	Exposure correction in enlargement copy of 120% or more Exposure correction voltage in enlargement copy of 120% or more V = V + N ✳ 0.3V Normal N = 0 V: Reference copy lamp voltage v: Voltage after exposure correction	

<table>
<tr><th rowspan="2">Purpose/kind</th><th rowspan="2">Section</th><th colspan="3">Contents</th><th rowspan="2">Ref. page</th></tr>
<tr><th>Main code</th><th>Sub code</th><th>Description</th></tr>
<tr><td rowspan="4">Adjustment</td><td rowspan="2">Optical unit</td><td>50</td><td>1</td><td>Used to adjust the copy image position on the copy paper.
(Operation/procedure)
The adjustment is performed by changing the three set values A, B.
The zoom machine has two set values, the SPF machine three, but the normal machine only one.
When the simulation key operation is performed, warming-up is performed and the ready lamp is lighted. Then the currently set value is displayed on the COPIES SELECTED display. In the case of the zoom machine, there are three set values. Every time when the tray select key is pressed, set values A, B is displayed in turn. In this case, the pause lamp status allows monitoring the three set values.
<table>
<tr><th>Display lamp</th><th>Set value</th></tr>
<tr><td>Copier tray cassette paper feed lamp BLINKS.</td><td>B (Only in the zoom machine).</td></tr>
<tr><td>Tray cassette paper feed lamp ON</td><td>A</td></tr>
</table>
Set all three set values A, B to "0", make copies at 64% and 129% and measure the shift between the copy paper lead edge and the copy image. Put the measure values into the following formulas to obtain the rough values of A and B.
L1 = Shift between 129% copy paper lead edge and copy image (mm)
L2 = Shift between 64% copy paper lead edge and copy image (mm)
A = 8.2423 x (L1 – L2)
It corresponds to the time required for the scanner to reach the document lead edge image position from starting scanning.
It is, in other word, the value used to determine the optical position of the document lead edge reference position of the document table, and must be fitted to the edge section of the document reference plate.
If this value is not proper, the distance between the copy image lead edge and the purpose edge is varied when the copy magnification ration is varied.
B = 16.0568 x L2 – 7.9661 x L1 (Only in the zoom model)
It corresponds to the timer required for the resist roller (RRC) to turn on from when the scanner started scanning and reached the optical document lead edge reference position.
This set value is used to determine the paper feed timing for the image position on the OPC drum, and the relationship between the paper and the image is changed.
C = 8.0906 x L3 (timer value) (Only in the SPF machines)
This set value is used to change the paper feed timing for the scanning start timing (the image position on the OPC drum), and to change the relationship between the paper and the image position.
 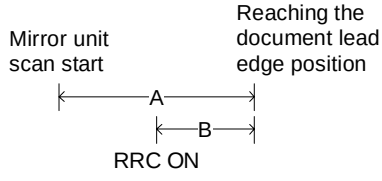

In the non zoom model only set value "A"</td><td>7-19</td></tr>
<tr><td>Developer unit</td><td>8</td><td>1</td><td>Used to check the developing bias voltage.
(Operation/procedure)
The developing bias voltage is outputted for 30 sec.</td><td>7-30</td></tr>
<tr><td></td><td>25</td><td>2</td><td>Used for initial setting of toner density when replacing developer.</td><td>4-5</td></tr>
</table>

Purpose/kind	Section	Contents			Ref. page
		Main code	Sub code	Description	
Adjustment	Developer unit	25	2	(Operation/procedure) After 3 minutes from start of stirring of the DV unit after the main motor rotation, toner density is sampled 16 times during 8 sec, and the average value is stored as the toner density reference value in the RAM. With this reference value as the threshold value, the toner density is controlled. 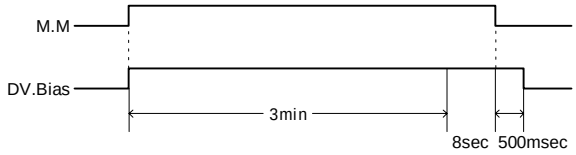 (Note) Do not perform this simulation except for when replacing the developer with a new one. If this simulation is performed in the other case, overtoning or undertoning may occur, resulting in a poor copy quality.	4-5
	Process	8	2	Used to check the voltage of the main charger and the transfer charger in the manual and auto copy mode.	Grid voltage –750±10V
				The main charger and the transfer charger unit are turned on for 30 sec in the manual and auto copy mode.	
			3	Used to check the voltage of the main charger and the transfer charger in the photo copy mode.	Grid voltage –459.9±10V
				The main charger and the transfer charger unit are turned on for 30 sec in the photo copy mode.	
			4	Used to check the voltage of the main charger and the transfer charger in the manual and auto copy mode..	Grid voltage –634.4±10V
				The main charger and the transfer charger unit are turned on for 30 sec in the toner save mode. (manual and auto copy mode)	
			7	Used to check the separation charger voltage.	7-30
				The separation charger unit is turned on for 30 sec.	
			9	Used to check the voltage of the main charger, the transfer charger, and the separation charger.	
				The main charger unit, the transfer charger unit, and the separation charger unit are turned ON for 30 sec.	
Setting	Specifications	26	6	Used to set the destination.	
				(Operation/procedure) When the simulation key operation is performed, the code number of the currently set destination is displayed. Enter the code number corresponding to the desired destination and press the print button, and the specifications for the destination will be set.	

Code No.	Destination
00	Japan
01	SEC
02	SECL
03	SEEG
04	SUK
05	SCA
06	Other inch series
07	Other AB series
08	LAG

			30	Setting for CE standards After pressing the print switch, the currently set code is displayed. Enter the following set code with the 10-key pad and press the print switch. 0: non CE 1: CE (Set to 1 for the areas of 200V/50Hz. Set to 0 for the areas of 100V/60Hz.)	

Purpose/kind	Section	Contents			Ref. page
		Main code	Sub code	Description	
Setting	Paper feed unit	26	12	Used to set the manual paper feed mode. There are two operation modes: auto and manual. Either of the two can be set. (Operation/procedure) When the simulation key operation is performed, the code number of the currently set operation mode is displayed. Enter the code number corresponding to the desired operation mode and press the print button, and the operation mode will be set. Code number / Operation mode / Operation 1 / Manual / When the print button is pressed, copying is started. 0 / Auto / When copy paper is set, coping is automatically started.	
	Fuser unit	26	13	Used to set the operation mode of the main motor in warming up. There are two operation modes: auto and manual. Either of the two can be set. (Operation/procedure) When the simulation key operation is performed, the code number of the currently set operation mode is displayed. Enter the code number corresponding to the desired operation mode and press the print button, and the operation mode will be set. Code number / Operation mode / Operation 0 / Normal mode / The main motor rotates until the process cleaning is completed. 1 / Long mode / The main motor keeps rotating until completion of warming up.	
		43	1	Used to set the fusing temperature. (Operation/procedure) When the simulation key operation is performed, the lower two digits of the currently set temperature is displayed on the COPIES SELECTED display. (Example: 75 ——— 175 °C) Pressing the paper select key under that state allows selection of fusing temperature by the increment of 5 °C. To set the temperature, press the print button. (Standard set value: 85 ——— 185°C)	
			2	Used to set the fusing temperature in the power save mode. (Operation/procedure) When the simulation key operation is performed, the lower two digits of the currently set temperature is displayed on the COPIES SELECTED display. Pressing the paper select key under that state allows selection of fusing temperature by the increment of 5 °C. To set the temperature, press the print button. ⁎00 → 05 → 10 → 85 → 90 → 95 ⁎: Standard set value	
	Process	44	1	Used to set the correction modes. (Operation/procedure) When the simulation key operation is performed, the code number of the currently set mode is displayed on the COPIES SELECTED display. Enter the code number corresponding to the desired correction mode and press the print button, and the mode will be set. Code / Correction mode 2 / Optical system dirt correction enable 4 / Photoconductor drum membrane wear correction enable 10 / Toner correction control Set the total of codes of above modes. Factory setting is "16."	

Purpose/kind	Section	Contents			Ref. page
		Main code	Sub code	Description	
Counter	Copy count	22	1	Used to check the maintenance count value.	
				(Operation/procedure) The maintenance count value is displayed dividedly by two digits three times on the COPIES SELECTED display. There is a pause between any two displays. After the longest pause, the top two digits are displayed.	
			2	Used to check the set maintenance cycle (maintenance preset counter).	
	Maintenance	20	1	Used to reset the maintenance counter.	
		21	1	Used to set the maintenance cycle.	
				(Operation/procedure) After performing the simulation key operation, enter the code number corresponding to the desired maintenance cycle listed below.	

Code No.	Maintenance lamp ON cycle	Photoconductor lamp ON cycle
1	Every 10,000 copies	Every 40,000 copies
2	Every 20,000 copies	Every 40,000 copies
3	Every 40,000 copies	Every 40,000 copies
4	Lamp not ON	Lamp not ON

Set to "4" when shipping.

Purpose/kind	Section	Main code	Sub code	Description	Ref. page
	Drum count	24	7	Drum count data is reset.	
		22	12	Used to check the drum counter value inside the installed OPC drum unit.	
	Developer count	42	1	Used to reset the developer count value.	
		22	6	Used to display the developer count value.	
Operation check	Paper feed unit	30	1	Used to check the operations of the sensors and detectors in the paper feed section, and their related circuits. The operations of the sensors and the detector in the paper feed section can be monitored by the lamps on the operation panel.	3-4
				(Operation/procedure) ON/OFF of the sensors and detectors in the paper feed section can be monitored with the lamps on the operation panel.	

Sensor name	Display lamp
Paper size detector (PWD)	Toner empty lamp
Resist detector (PPD)	Jam lamp
Paper exit detector (POD)	OPC drum lamp
Tray open/close detector (PED1)	No.1 paper feed cassette lamp
Manual paper feed detector (PID)	Manual paper feed lamp

Purpose/kind	Section	Main code	Sub code	Description	Ref. page
			2	Used to check the operations of the sensors and detectors in the option tray and their related circuits. The operations of the sensors and detectors in the option tray can be monitored with the display lamps on the operation panel.	
				(Operation/procedure) ON/OFF of the sensors and detectors in the option tray can be monitored with the lamps on the operation panel. The operations of the sensors and detectors in the option tray can be monitored with the lamps on the operation panel. Used to check the operations of the sensors.	

Sensor name	Display lamp
Option tray cover open/close detector (CSDSW)	Toner empty lamp
Option tray paper feed sensor (CSPPD)	Jam lamp
Option tray open/close detector (CPED2)	Upper tray lamp
Option tray detector (OCSD)	Lower tray lamp

Purpose/kind	Section	Contents			Ref. page
		Main code	Sub code	Description	
Operation check	Optical unit	1	1	Used to check the operation of the scanner unit and its control circuit.	
				(Operation/procedure) When the print button is pressed, scanning is performed at the speed corresponding to the currently set copy magnification ratio. The copy magnification ratio can be set arbitrarily.	
			2	Used to check the operations of the sensors and detectors in the optical unit and their related circuits.	3-4
				(Operation/procedure) ON/OFF of the sensors and detectors in the optical unit can be monitored with the lamps on the operation panel. Sensor name: Mirror home position sensor (MHPS) — Display lamp: OPC drum lamp Sensor name: Lens home position sensor (LHPS) — Display lamp: Toner empty lamp	
			3	Used to check the operation of the lens unit and its control circuit.	
				(Operation/procedure) The lens unit moves to each position of the following copy magnification ratios continuously, and stops at each position for about 0.5 sec. The copy magnification ratio corresponding to each stop position of the lens is displayed on the operation panel. 10% → Reduction 1 → Reduction 2 → Enlargement 1 → Enlargement 2 → 100%	
			4	Used to check the operation of the optical unit and its control circuit.	
				(Operation/procedure) The operation of simulation 1-3 is repeatedly performed.	
		5	3	Used to check the operation of the copy lamp and its control circuit.	
				(Operation/procedure) The copy lamp lights up for first one sec at full power, and lights for 4 sec at the currently set exposer level (copy density). 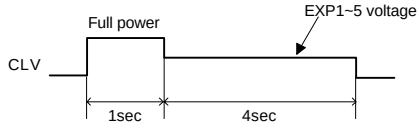 	
	Operation unit	5	1	Used to check the operations of the lamps on the operations panel and their control circuits.	
				(Operation/procedure) All display lamps on the operation panel turns on for 5 sec.	
	Fuser unit	5	2	Used to check the operation of the heater lamp and its control circuit.	
				(Operation/procedure) The heater lamp turns on for 500ms, and off for 500ms five times repeatedly.	
	Process	5	4	Used to check the operation of the discharge lamp and its control circuit.	
				(Operation/procedure) The discharge lamp lights up for 30 sec.	
			5	Used to check the operation of the blank lamp and its control circuit.	
				(Operation/procedure) The blank lamps lights up sequentially from the rear frame side to the front frame side, and all the lamps light up for 10 sec.	
	Operation check	6	2	Used to check the operation of the OPC separation pawl solenoid and its control circuit.	
				(Operation/procedure) The OPC separation pawl solenoid repeats 0.5 sec ON and 0.5 sec OFF twenty times.	

Purpose/kind	Section	Contents			Ref. page
		Main code	Sub code	Description	
Operation check	Process	44	2	Used to display the reference value of the optical system dirt correction. This value affects the process correction system. For details, refer to the descriptions on the process correction system.	5-5 5-13
			3	Used to display the reference value of the optical system dirt correction.	5-13
				(Operation/procedure) When the simulation key operation is performed, the current correction amount is displayed in hexadecimal number on the COPIES SELECTED display. The decimal number converted from the hexadecimal number shows the actually corrected copy lamp voltage. Example --- 1d] : 2.9V correction	
			4	Used to display rotating time of the photoconductor drum. This value affects the process correction system. For details, refer to the descriptions on the process correction system.	5-12
				(Operation/procedure) When the simulation key operation is performed, the current rotating time of the photoconductor drum is displayed in the unit of minute on the COPIES SELECTED display.	
	Developer unit	10		Used to check the operation of the toner motor and its control circuit.	
				(Operation/procedure) The toner motor turns on for 30 sec.	
		25	1	Used to check the operation of the sections other than the optical unit and to check the operation of the toner density sensor.	
				(Operation/procedure) The main motor rotates and the units connected to the main motor operate accordingly. The output level of the toner density sensor is displayed on the COPIES SELECTED display.	
Operation check	Gereral (Aging mode)	7	1	Warm-up time display and aging When this simulation is executed, warm-up is started, and the warm-up time is counted every second and displayed on the copy quantity display. At completion of warm-up, counting is stopped and RPL is lighted. Press CA key to clear the warm-up time display, set the desired copy quantity and press the PRINT button, and copying will be performed to make the set quantity of copies.	
			4	Omitting warm-up When this simulation is executed, the machine goes into the ready state (RPL on).	
			6	Intermittent aging When this simulation is executed, warm-up is started. After completion of warm-up, set the copy quantity and press the PRINT button, and copying will be performed to make the set quantity of copies.	
Trouble code resets		14		Used to cancel troubles other than self diag U2 trouble code.	
				(Operation/procedure) After cancellation of the trouble code, the simulation is also automatically cancelled.	
		16		Used to cancel the self diag U2 trouble code.	
				(Operation/procedure) After cancellation of the trouble code, the simulation is also automatically cancelled.	

6. User simulation

[Specifications which does not conform to International EnergyStar]

A) Preheat mode (The machine enters this mode after passing a certain time from completion of the final operation.)

- The fusing section temperature is lower than the normal ready state.
- The fan speed is reduced. (Patent avoidance)
- The energy-saving lamp is turned on and the other display lamps are also turned on. (Including the ready lamp.)
- Preheat is terminated when any operation is made (key input, cassette loading, original setting, or other operation which the machine can detect). The energy-saving lamp blinks. At the same time, the fusing section temperature rises to the copy ready level within 10 sec.

B) Auto power shut off mode (The energy-saving effect is greater than the preheat mode. The machine enters this mode after passing a certain time from completion of copying. When, however, the machine is temporarily stopped by paper jam, paper empty, toner empty (with the toner supply lamp ON), etc., the machine does not enter this mode.)

- Power supply is stopped only to the fusing section.
- The fan speed is reduced. (Patent avoidance)
- The energy-saving lamp is turned on, and the other lamps are turned off.
- When the print button is pressed, the auto power shut off is terminated and the energy-saving lamp blinks. At the same time, the fusing section temperature rises to the copy ready level within 10 sec.
- The time from completion of the auto off mode to turning off of the energy-saving lamp after returning to the ready state is the same as the max. warm-up time after turning on the power.

※ Time required to enter the preheat mode or auto off mode and cancellation of the mode can be set by the user program. (For details, refer to the descriptions on the user program.)

Machine state	A. Warmup	B. Ready	C. Copying	Energy-saving mode		Auto start from D, E	
				D. Preheating (※1)	E.Auto power shut off mode	F. Resetting	G. Reversed (Reset)
Operation panel	ON ○	ON ○	ON ○	ON ○	OFF ●	ON ○	ON ○
Energy-saving LED	Blink	OFF ●	OFF ●	ON ○	ON ○	Blink	Blink
Ready lamp	ON ○	ON ○	OFF ●	ON ○	OFF ●	ON ○	OFF ●
Power switch	ON	ON	ON	ON	ON	ON	ON

※1: When the copy button is pressed during preheating, the machine enters the state of "G. Reserved."

Auto start function

Even during warming up or during resetting after completion of energy-saving mode, copy condition can be set and copy reservation can be accepted.
When reservation is made, copying is started when the fusing temperature of the machine reaches the specified level.
When copy reservation is made, the copy conditions cannot be changed until the reservation is canceled with the clear key.

(2) User simulation prcedure

Simulation procedure	State	Paper jam/ developer replacement/ toner supply warning LED	Copy quantity display	Print LED
1. Press the paper feed section select key for more than 5 sec.	User simulation input allowed.	Blink	–	OFF
2. Enter a code number with 10 key.	Simulation code selection.	Blink	1 –	ON
3. Press the COPY button.	Simulation code determined.	Blink	1 1	ON
4. Enter the selection code with 10 key.	Simulation code menu selection.	Blink	1 2	ON
5. Press the COPY button.	Simulation code menu determined.	Blink	1 2	OFF
6. Press the paper feed section select key.	Escape from user simulation.	OFF	Returns to copy quantity display.	—
⁎ Press the clear key.	• When this key is pressed during user simulation selection, the mode returns to state 1 (user simulation input allowed.) (Use this key to correct mistyping of input.) • After completion of program setting, when this key is pressed, the mode the following program input can be made.	Blink		OFF

(: Blink)

(3) User program code table

[ES conforming area]

Program	P code	Selection code: Set content	Factory setting
Auto clear passing time setting	⌈1⌋	⌈0⌋: NO ⌈1⌋: 30 sec. ⌈2⌋: 60 sec. ⌈3⌋: 90 sec. ⌈4⌋: 120 sec.	⌈2⌋: 60 sec.
Preheat mode setting and passing time setting	⌈2⌋	⌈0⌋: NO ⌈1⌋: 30 sec. ⌈2⌋: 60 sec. ⌈3⌋: 90 sec. ⌈4⌋: 120 sec.	⌈0⌋: NO
Auto off mode passing time setting	⌈3⌋	⌈1⌋: 30 min. ⌈2⌋: 60 min. ⌈3⌋: 90 min. ⌈4⌋: 120 min. ⌈5⌋: 240 min.	⌈0⌋: NO Since P code [5] is set to "[0]: NO," this setting is set to [0] though there is no selection code specified.
Stream feeding mode setting and cancel (Only models with SPF)	⌈4⌋	⌈0⌋: NO ⌈1⌋: YES	⌈0⌋: NO
Auto power shut off mode setting, cancel	⌈5⌋	⌈0⌋: NO ⌈1⌋: YES	⌈0⌋: NO

※ When auto power shut off mode passing time setting (operation with P code [3]) is made under the state where the auto power shut off mode is canceled ("[0]: NO" is selected with P code [5]), the machine enters the auto power shut off mode set conditions without operation with program [5].

[9] SELF DIAG

1. Summary/purpose

This model has the self diag function for the following purposes:

1) When a trouble occurs in the machine, the machine detects the trouble and displays the trouble content on the copy quantity display to alert the customer and the serviceman.
2) When any abnormality is detected, the power supply line is cut off immediately for safety and to protect the machine from damage.

2. Operation

The self diag content is displayed in the following procedure.

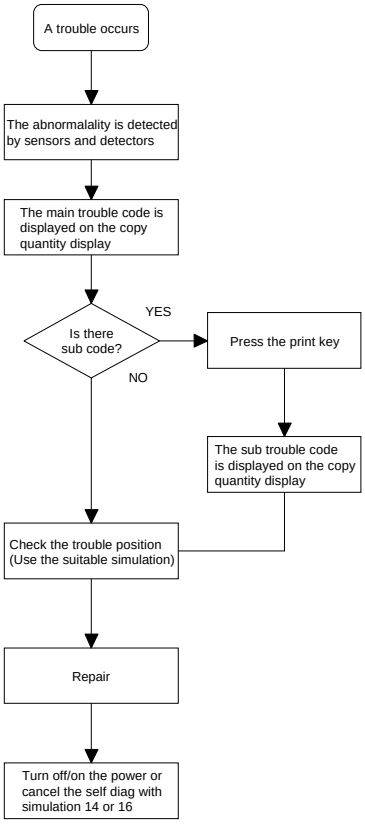

3. Clearing the self diag display

After repairing the trouble section, clear the self diag display according to the table below:
Clearing the self diag display

Self diag display	Display clearing procedure
L1, L3, L4, L5, L8	Turn off/on the power.
H3, H4	Execute simulation 14.
U2	Execute simulation 16.
CH, PC	When the trouble is cancelled,, the display is cleared.

4. Self diag contents

Error code		Item	Description	Ref. page
Main	Sub			
L1	0	Content	Scanner feed trouble	8-10
		Detail	1) 86 pulses (45 mm) of the scanner motor drive pulse have been outputted after the scanner unit started scanning, but the scanner home position sensor (MHPS) does not turn off. 2) The scanner unit is not at its home position (MHPS does not turn on) when the scanner unit starts scanning. 3) The scanner home position sensor (MHPS) does not turn on when the scanner performs the initial operation.	
		Cause	1) Scanner motor trouble 2) Scanner motor control circuit trouble 3) Scanner motor rotation sensor and its control circuit trouble 4) Scanner home position sensor (MHPS)and its input circuit trouble (main control circuit trouble) 5) Scanner unit drive mechanism trouble 6) An overload to the drive section	
		Remedy	Use simulations 1-1 and 1-2 to check the following: A. Check the mirror motor control circuit and its peripheral sections. 1) The scanner unit operates normally. 2) The scanner home position sensor ((MHPS) operates normally and its output signal is inputted to the main control PWB. 3) The scanner motor drive signal is outputted. 4) The scanner motor rotation sensor signal is inputted to the control circuit. B. Check the scanner unit drive mechanism. 1) Drive wire 2) Pulley 3) Gear After repair, turn off/on the power switch.	
L3	0	Content	Scanner return trouble	8-10
		Detail	1) The scanner motor drive pulses required for the scanner unit to return are shifted more than 50 pulses for the drive pulses required for feeding. (The corresponding distance is 10mm or more.) 2) The scanner motor drive pulses required for the scanner unit to return are within 50 pulses for the drive pulses required to feed. 3) The scanner unit does not return. Or through it returns, the scanner unit does not return to its home position (the MHPS does not turn on). (Though the scanner motor drive pulses required to return are 50 pulses greater than the drive pulses required for the scanner unit to feed, the scanner unit is not in the home position (the MHPS does not turn on). 4) After the scanner unit returns, the MHPS does not turn on.	
		Cause	1) Scanner motor trouble 2) Scanner motor control circuit trouble 3) Scanner motor rotation sensor and its peripheral sections trouble 4) Scanner home position sensor (MHPS) and its input circuit trouble 5) Scanner unit drive mechanism trouble 6) Overload at the scanner motor drive section	
		Remedy	Use simulation 1-1 and 1-2 to check the following: A. Check the mirror motor control circuit and its peripheral. 1) The scanner unit operates normally. 2) The scanner home position sensor (MHPS) operates normally and its output signal is inputted to the main control circuit. 3) The scanner motor drive signal is inputted. 4) The scanner motor rotation sensor signal is inputted to the control circuit. B. Check the scanner unit drive mechanism. 1) Drive wire 2) Pulley 3) Gear After repair, turn off/on the power switch.	
L4	1	Content	Main motor lock trouble	

Error code		Item	Description	Ref. page
Main	Sub			
L4	1	Detail	The rotary encoder signal cannot be detected for more than 50ms during delivery of the main motor On signal output.	
		Cause	1) Main moor trouble 2) Main control circuit trouble 3) Main motor rotation sensor and its input circuit (main control circuit) trouble 4) Main motor drive mechanism trouble 5) An overload on the main motor drive section	
		Remedy	Check the following items: A. Check the main motor control circuit and its peripheral sections. 1) Main motor drive signal is inputted. 2) The main motor rotation sensor signal is inputted to the control circuit. B. Check the main motor drive mechanism. 1) Drive wire 2) Pulley 3) Gear After repair, turn off/on the power switch.	
L5	2	Content	Lens drive motor trouble	8-10 8-11
		Detail	1) During the initial operation, the lens does not move from the reduction copy position to the enlarged copy position. Or the lens home position sensor (LHPS) does not turn on even though the lens moves (130mm/lens motor drive pulse output). 2) During the initial operation, the lens does not move to the enlargement copy position. Or the lens moves (70mm/ 50 pulses of lens motor drive pulse are outputted) but the lens home position sensor (LHPS) does not turn off. 3) When the lens moves from the reduction coy position to the enlargement copy position, the specified number of pulses required for the lens home position sensor (LHPS) to move from ON position to OFF position is shifted by 20 pulses (4mm) or more. 4) AT the completion of lens movement, the lens home position sensor is not ON when in enlargement copying, or not OFF when in reduction copying.	
		Cause	1) Lens motor trouble 2) Main control circuit trouble 3) Lens motor rotation sensor and its input circuit (main control PWB) trouble 4) Lens motor drive mechanism trouble 5) An overload on lens motor drive mechanism	
		Remedy	Use simulations 1-3 or 1-4 to check the following items: A. Check the lens motor control circuit and its peripheral sections. 1) The lens motor drive signal is outputted. 2) Lens motor rotation sensor signal is inputted to the control circuit. B. Check the lens motor drive mechanism. 1) Drive wire 2) Pulley 3) Gear After repair, turn off/on the power switch.	
L8	1	Content	Power frequency abnormality	
		Detail	The power frequency is shifted from the specified level by 5% or more for 10 cycles or more, or the FW signal cannot be detected for more than 5 sec.	
		Cause	1) FW is not outputted or the output waveform is abnormal. 2) Power circuit trouble (AC power unit/DC power unit) 3) FW input circuit trouble (main control circuit) 4) AC power trouble (waveform/voltage)	
		Remedy	Check the waveforms of the following units with an oscilloscope. 1) FW signal waveform in the DC power unit 2) FW signal waveform in the main control circuit 3) AC power line After repair, turn OFF/ON the power switch.	
	3	Content	During execution of simulation 47, the AE sensor output does not change according to change in the copy lamp voltage.	8-5
		Detail	AE sensor trouble	
		Cause	1) AE sensor or its input circuit (main control PWB) trouble 2) Copy lamp control circuit trouble (copy lamp control signal abnormality) 3) A white paper is not set on the document table or the document table or the document cover is dirty.	

Error code		Item	Description	Ref. page
Main	Sub			
L8	3	Remedy	Check the following items: 1) AE sensor or its input circuit 2) Copy lamp control circuit (copy lamp control signal) After repair, turn off/on the power switch.	
H2	0	Content	Fuser section thermistor trouble	
		Detail	The voltage across the thermistor input circuit remains 4.6V or more for 1500 ms or more.	
		Cause	1) Thermistor and its input circuit (main control PWB) trouble (disconnection)	
		Remedy	Check the thermistor and its input circuit (main control circuit) for disconnection. AFter repair, used simulations 14 to cancel the self diag.	
H3	0	Content	Abnormally high temperature in the fuse section	8-11
		Detail	The voltage across the thermistor input circuit remains 1.39V or less for 1500 ms or more. (A high temperature above 241 C is detected.)	
		CAuse	1) Thermistor and its input circuit (main control PWB) trouble (disconnection) 2) Heater lamp control signal and its control circuit trouble (The heater lamp remains ON.)	
		Remedy	Check the following items: 1) Thermistor and its input circuit (main control PWB) disconnection 2) Heater lamp control signal and its control circuit After repair, use simulations 14 to cancel the self diag.	
H4	0	Content	An abnormally high temperature in the fuse section	8-11
		Detail	1) The voltage across the thermistor input circuit remain 3.39V or more for 1500ms. (A temperature below 148°C is detected.) 2) The temperature does not reach the specified temperature within 60 sec after starting warming up.	
		Cause	1) Thermistor and its input circuit (main control circuit) trouble (disconnection) 2) Heater lamp trouble 3) Heater lamp control signal and its control circuit trouble (The heater lamp remains ON.)	
		Remedy	Check the following items: 1) Check the thermistor and its input circuit (main control PWB) for disconnection or shot. 2) Heater lamp control signal and its control circuit 3) Heater lamp After repair, use simulations 14 to cancel the self diag.	
U2	1	Content	In the main PWB EEPROM data sum check, the data do not correspond to the CPU data.	8-12
		Cause	1) Main PWB EEPROM trouble 2) Main control circuit trouble 3) Communication line trouble between the main PWB EEPROM and the CPU 4) CPU trouble 5) Data bus line trouble	
		Remedy	Check the following items: 1) main PWB EEPROM 2) Memory control circuit 3) Communication line between main PWB EEPROM and CPU 4) CPU 5) Data bus line After repair, use simulations 16 to cancel the self diag. When the power is turned on, data in the main PWB EEPROM are transferred to the CPU to perform sum check. The operation can be checked at that time.	
	4	Content	memory line communication trouble	8-12
		Detail	1) In access to the main PWB EEPROM, the respond command ACK is not inputted to the CPU. 2) When writing data into the main PWB EEPROM, the write enable signal is not inputted to the CPU for 11ms or more.	
		Cause	1) Main EEPROM RAM trouble 2) Memory control circuit trouble 3) Communication line trouble between main PWB and CPU 4) CPU trouble 5) Data bus line trouble	

Error code		Item	Description	Ref. page
Main	Sub			
U2	4	Remedy	Check the following items: 1) Main PWB EEPROM 2) Memory control circuit 3) Communication line between main PWB EEPROM and CPU 4) CPU 5) Data bus line After repair, use simulation 16 to cancel the self diag When the power is turned on, data communication is performed with the main PWB EEPROM and the CPU. The operation can be checked at that time.	8-12
U5	5	Content	Abnormally high temperature on the original glass when using the SPF.	
		Detail	The thermistor detects 55°C or above.	
		Cause	1) Thermistor and input circuit (main control PWB) trouble (disconnection) 2) Copy lamp control signal and control circuit trouble (Copy lamp remains ON.)	
		Remedy	Check the following items. 1) Thermistor and input circuit (main control PWB) disconnection 2) Copy lamp control signal and control circuit Turn OFF/ON the power to cancel the diagnostics.	
EE	EU	Content	Toner density initial setting trouble (undertoner)	8-6
		Detail	When setting the toner density initial level with simulation 25-2, the toner density sensor output is below the specified voltage (1.53V).	
		Cause	1) Toner sensor trouble 2) Toner sensor input circuit trouble (main control PWB)	
		Remedy	Use simulations 25-2 to check the following items: 1) Toner sensor 2) Toner sensor input circuit After repair, use simulations 14 to cancel the self diag.	
	EL	Content	Toner density initial setting trouble (overtoner)	8-6
		Detail	When setting the toner density initial level with simulation 25-2, the toner density sensor output is above the specified voltage (3.49V).	
		Cause	1) Toner sensor trouble 2) Toner sensor input circuit trouble (main control circuit) 3) Toner motor and its control circuit trouble	
		Remedy	Use simulations 25-2 to check the following items: 1) Toner sensor 2) Toner sensor input circuit 3) Toner motor and its control circuit After repair, use simulations 14 to cancel the self diag.	
CH	Light	Content	Paper feed section cover open	8-10
		Detail	1) The paper feed section cover open/close detector (CSDSD) and its input circuit remains Low (0V).	
		Cause	1) Paper feed section cover open/close mechanism trouble 2) Paper feed section cover open/close detector signal (CSDSW) and its control circuit trouble 3) Paper feed section cover open/close detector (CSDSW) trouble	
		Remedy	check the following items: 1) Paper feed section cover open/close mechanism 2) Paper feed section cover open/close detector signal (CSDSW) and its input circuit 3) Paper feed section cover open/close detector (CSDSW)	
	Light	Content	Manual paper feed unit installation trouble (MFD0, MFD1)	8-10
		Detail	1) The manual paper feed unit signal (CSDSW) and its control circuit remains MFD0 level and MFD1 level.	
		Cause	1) The manual paper feed unit signal (MFD1) line is not connected or disconnection in the line. (The manual paper feed unit is not installed.)	
		Remedy	Check the following item: 1) Manual paper feed unit signal (MFD1) line	

Error code		Item	Description	Ref. page
Main	Sub			
PC		Content	Personal counter installation trouble	
		Detail	The personal counter is not installed in the personal counter mode. The input circuit of the personal counter installation detect signal does not turn HIGH level.	
		Cause	1) Personal counter trouble 2) Personal counter installation detecting signal input circuit (main PWB) trouble 3) Personal counter wiring	
		Remedy	Check the following items: 1) Personal counter 2) Personal counter installation detecting signal input circuit (main PWB) 3) Personal counter wiring	
Paper empty		Content	Paper tray open/no copy paper	
		Detail	1) The selected paper tray is removed. 2) There is no paper in the selected paper tray.	
		Cause	1) The selected paper tray is removed. 2) There is no paper in the selected paper tray. 3) The selected paper tray detector (CPED1, CPED2) and its input circuit (main PWB) trouble 4) The selected paper tray paper empty detector (CPED1/CPED2) and its input circuit (main PWB)	
		Remedy	Check the following items: 1) The selected paper tray paper empty detector (CPED1/CPED2) and its input circuit (main PWB)	
Toner empty	Light	Content	Toner concentration fall	8-6
		Detail	1) No toner in the toner box 2) Toner supply trouble	
		Cause	1) No toner in the toner box 2) Toner motor and its control circuit (main PWB) trouble 3) Toner supply section clogging 4) Toner sensor and its input circuit (main PWB) trouble	
		Remedy	Use simulation 25-2 to check the following items: 1) Toner box 2) Toner motor and its control circuit (main PWB) 3) Toner supply section 4) Toner sensor and its control circuit (main PWB)	
Toner empty	Blink	Content	Toner concentration fall (Copy stop)	8-12
		Detail	1) No toner in the toner box 2) Toner density falls below the specified level.	
		Cause	1) No toner in the toner box 2) Toner motor and its control circuit (main PWB) trouble 3) Toner supply section clogging 4) Toner sensor and its input circuit (main PWB) trouble	
		Remedy	Check the following items: 1) Toner box 2) Toner motor nd its control circuit (main PWB) 3) Toner supply section 4) Toner sensor and its input circuit (main PWB)	
JAM		Content	Copy paper misfeed trouble	8-3
		Detail	1) Misfeed of copy paper occurs in the copy paper feed section, the transfer section, the transport section, or the fuse section.	
		Cause	1) The copy paper detector in each section remains ON or OFF. 2) The copy paper detector in each section and its input circuit (main PWB) trouble 3) The copy paper feed and transport clutches in each section and its control circuit (main PWB) trouble 4) Paper feed roller and transport roller trouble 5) Copy paper fed and transport drive mechanism trouble (motor, gear, etc.) 6) Insufficient or excessive contact pressure between copy paper and the resist roller because of improper setting with simulation 51-2.	
		Remedy	Check the following items: 1) Copy paper detector in each section 2) Copy paper detector and its input circuit (main PWB) in each section 3) Copy paper feed and transport clutches and their control circuit (main PWB) trouble 4) Paper feed roller, transport roller 5) Copy paper feed and transport drive mechanisms trouble (motor, gear, etc.) 6) Set value of simulation 51-2	

Error code		Item	Description	Ref. page
Main	Sub			
SPFJAM		Content	Document misfeed trouble	8-11
		Detail	1) When the document is in the SPF section, a misfeed of copy paper occurs.	
		Cause	1) The document detector in he SPF section remains ON or OFF. 2) The document detector in the SPF section and its input circuit (main PWB) trouble 3) The paper feed and transport clutches in the SPF section and its control circuit (main PWB) trouble 4) SPF section paper feed roller and transport roller trouble 5) Document paper feed section and its transport drive system trouble (motor, gear, etc.) 6) Insufficient or excessive contact pressure between the SPF resist roller and the document because of improper setting with simulation 51-7	
		Remedy	Use simulation 2 to check the following items: 1) SPF section document detector 2) SPF section document detector and its input circuit (main PWB) 3) SPF section paper feed and transport clutches and their control circuit (main PWB) 4) SPF section paper feed roller, transport roller 5) Document paper feed and transport drive system (motor, gear, etc.) 6) Set value of simulation 51-7	

5. Conditions for the JAM display

1) Paper feed section

(1) The JAM lamp lights up if ⑨ PPD does not turn on within about 1.5 sec after ⑱ CPFC1 ON.

(2) The Jam lamp lights up if ⑨ PPD does not turn on within about 1.0 sec after ⑲ MPFC ON.

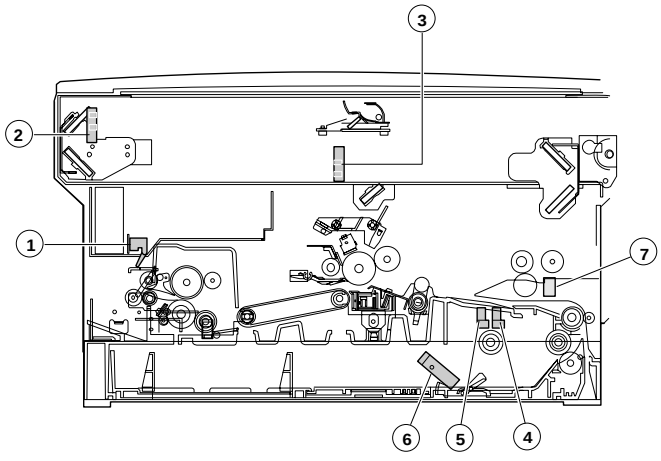

2) Transport section

(1) The JAM lamp lights up if ⑤ PPD does not turn off within about 3.2 sec after ⑫ RRC ON.

(2) The JAM lamp lights up if ① POD does not turn off within about 2.8 sec after ⑤ PPD ON.

(3) The JAM lamp lights up if ① POD does not turn on within about 2.4 sec after ⑫ RRC ON.

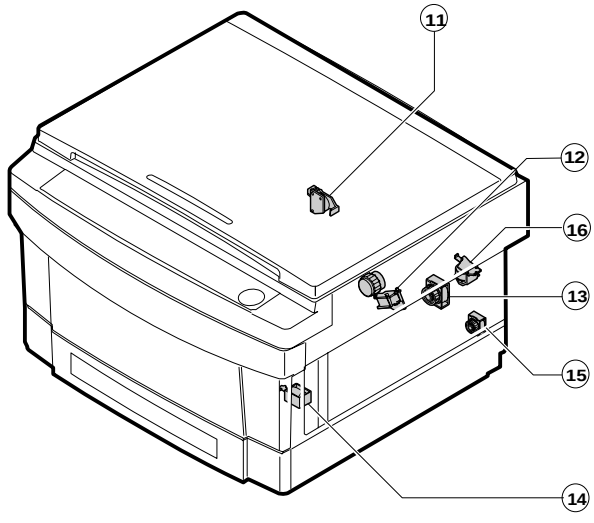

[10] SERVICING AT MEMORY TROUBLE AND MAIN CONTROL PWB REPLACEMENT

1. General

The control PWB stores various set values, adjustment values, and counter values.
These data are very important and used for operating the machine properly and for service control.
In the following cases, therefore, various set values, adjustment values and counter values must be set again.

※ When a memory trouble (U2) occurs.

※ When the EEPROM in the main control PWB is replaced.

※ When the main control PWB is replaced.

When "U2" trouble occurs, the data cannot be relied upon, and they must be set properly.

2. Purpose

The purpose is to reset the memory data to operate the machine properly.
Use the attached service memory data recording sheet to memorize the newest data when servicing in order to cope with the above situations. This improves efficiency in servicing and realizes quick recovery.

3. Remedies

Perform the procedures according to the following flowcharts.
"Sim" in the flowchart means "Simulation."

Memory trouble

Procedures for memory trouble, main control PWB replacement, and main control PWB EEPROM replacement

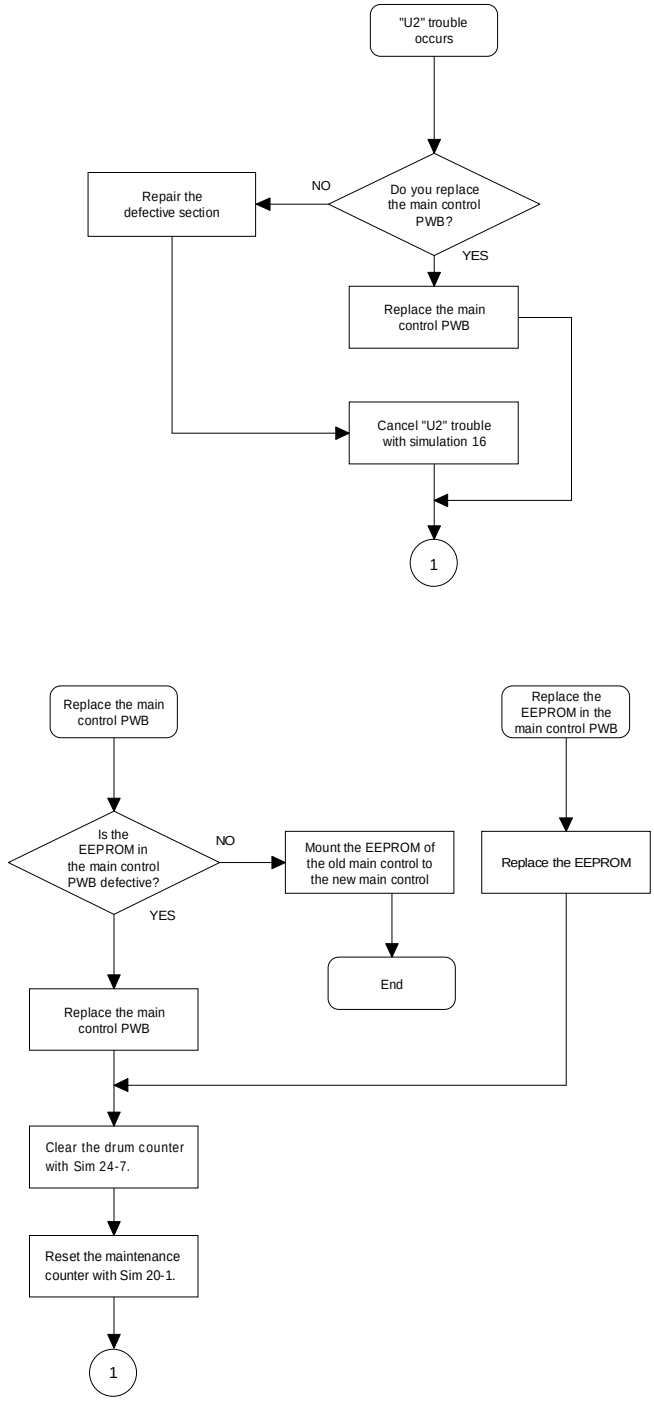

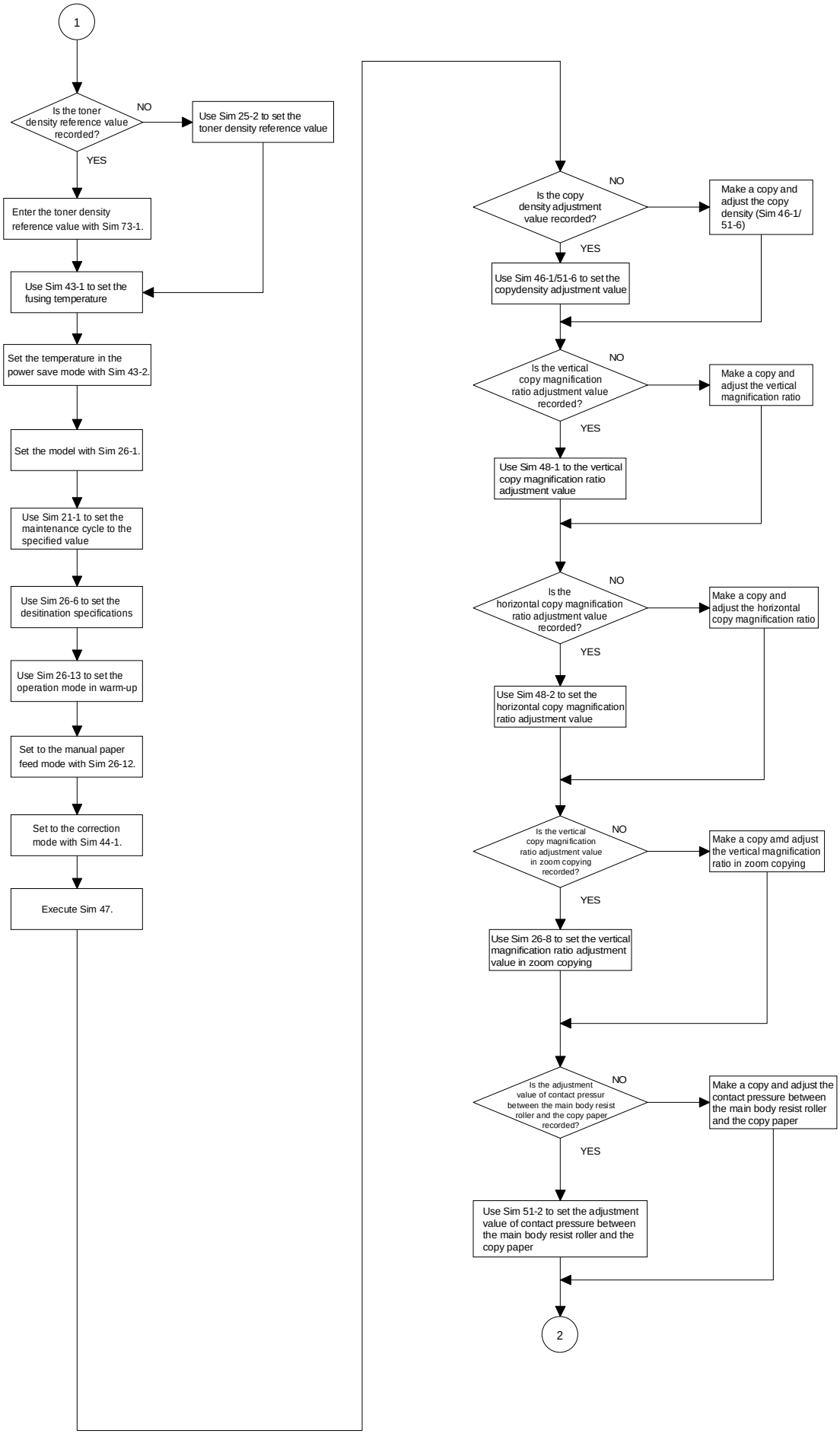
1
Is the toner density reference value recorded?
NO
Use Sim 25-2 to set the toner density reference value
YES
Enter the toner density reference value with Sim 73-1.
Use Sim 43-1 to set the fusing temperature
Set the temperature in the power save mode with Sim 43-2.
Set the model with Sim 26-1.
Use Sim 21-1 to set the maintenance cycle to the specified value
Use Sim 26-6 to set the desitination specifications
Use Sim 26-13 to set the operation mode in warm-up
Set to the manual paper feed mode with Sim 26-12.
Set to the correction mode with Sim 44-1.
Execute Sim 47.
Is the copy density adjustment value recorded?
NO
Make a copy and adjust the copy density (Sim 46-1/ 51-6)
YES
Use Sim 46-1/51-6 to set the copydensity adjustment value
Is the vertical copy magnification ratio adjustment value recorded?
NO
Make a copy and adjust the vertical magnification ratio
YES
Use Sim 48-1 to the vertical copy magnification ratio adjustment value
Is the horizontal copy magnification ratio adjustment value recorded?
NO
Make a copy and adjust the horizontal copy magnification ratio
YES
Use Sim 48-2 to set the horizontal copy magnification ratio adjustment value
Is the vertical copy magnification ratio adjustment value in zoom copying recorded?
NO
Make a copy amd adjust the vertical magnification ratio in zoom copying
YES
Use Sim 26-8 to set the vertical magnification ratio adjustment value in zoom copying
Is the adjustment value of contact pressur between the main body resist roller and the copy paper recorded?
NO
Make a copy and adjust the contact pressure between the main body resist roller and the copy paper
YES
Use Sim 51-2 to set the adjustment value of contact pressure between the main body resist roller and the copy paper
2

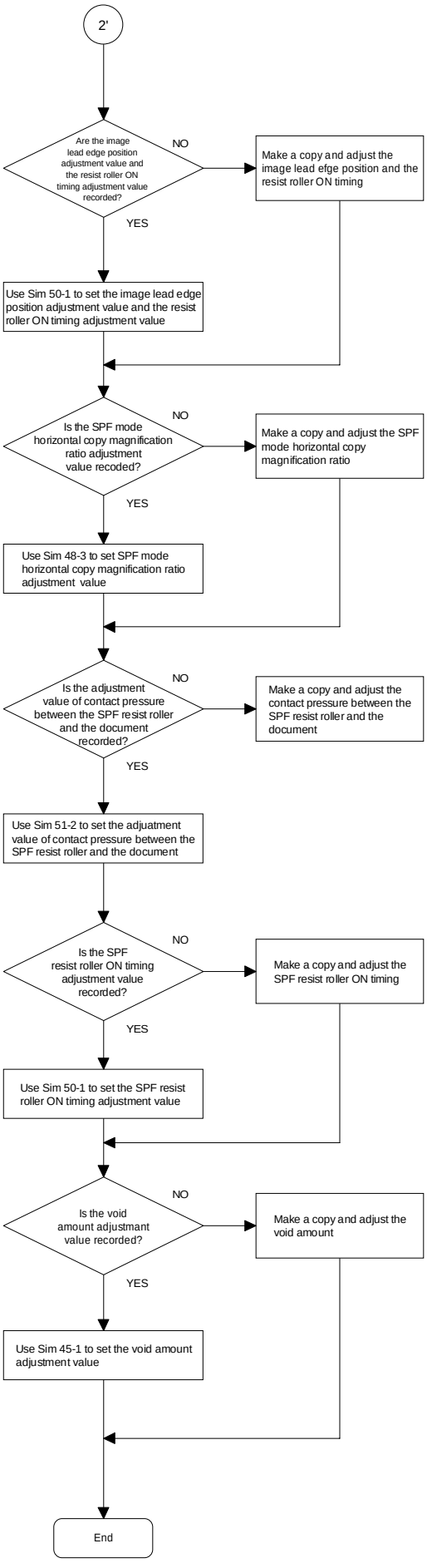
2'
Are the image lead edge position adjustment value and the resist roller ON timing adjustment value recorded?
NO
Make a copy and adjust the image lead efge position and the resist roller ON timing
YES
Use Sim 50-1 to set the image lead edge position adjustment value and the resist roller ON timing adjustment value
Is the SPF mode horizontal copy magnification ratio adjustment value recoded?
NO
Make a copy and adjust the SPF mode horizontal copy magnification ratio
YES
Use Sim 48-3 to set SPF mode horizontal copy magnification ratio adjustment value
Is the adjustment value of contact pressure between the SPF resist roller and the document recorded?
NO
Make a copy and adjust the contact pressure between the SPF resist roller and the document
YES
Use Sim 51-2 to set the adjuatment value of contact pressure between the SPF resist roller and the document
Is the SPF resist roller ON timing adjustment value recorded?
NO
Make a copy and adjust the SPF resist roller ON timing
YES
Use Sim 50-1 to set the SPF resist roller ON timing adjustment value
Is the void amount adjustmant value recorded?
NO
Make a copy and adjust the void amount
YES
Use Sim 45-1 to set the void amount adjustment value
End

4. Set value recording sheet

Purpose/kind	Section	Contents			
		Main code	Sub code	Set value	Description
Adjustment	Paper feed section	51	2		Adjustment value of contact pressure of the paper on the main body resist roller
	Optical unit	26	8		Adjustment value (lens shift amount adjustment value) of copy magnification ratio in zoom copying
		45			Adjustment value of copy paper lead edge void amount
		46	1		Adjustment value of copy density (exposure level) in each copy mode and of copy density gradient (exposure gradient)
					Manual copy mode density level 1 (Not toner save mode)
					Manual copy mode density level 5 (Not toner save mode)
					Manual copy mode density level 1 (Toner save mode)
					Manual copy mode density level 5 (Toner save mode)
					Auto copy mode density level 1 (Not toner save mode)
					Auto copy mode density level 5 (Not toner save mode)
					Auto copy mode density level 1 (Toner save mode)
					Auto copy mode density level 5 (Toner save mode)
					Photo copy mode density level 1 (Not toner save mode)
					Photo copy mode density level 5 (Not toner save mode)
		47			The AE sensor and the optical section characteristics memory data for the change in the copy lamp application voltage
		48	1		The vertical copy magnification ratio adjustment value
			2		The horizontal copy magnification ratio adjustment value (when the document table is used)
		50	1		The adjustment value of copy image position on the copy paper
					SEt value A
					Set value B
					Set value C
	SPF unit	48	3		The horizontal copy magnification ratio adjustment value (When the SPF is used)
		51	2		The adjustment value of the contact pressure between the SPF resist roller and the document
	Developing unit	25	2		Setting the toner concentration level
Setting	Specifications	26	6		Destination specifications
	Fuser unit	26	13		Setting of the main motor operation mode in warming up
		43	1		The set value of fusing temperature
			2		Fusing temperature setting in the power save mode
	Process	44	1		Image correction mode function setting
	Maintenance counter	21	1		Setting of the maintenance cycle

Memorizef•%!alues in theolumn ofxSet valu for ef cient s vicing hen the memory trouble occurs and the EEPROm is replaced.
Make a copy of this sheet and use with the service sheet.

5. Memory simulation list

Purpose/kind	Section	Contents				Ref. page
		Main code	Sub code	Default value	Description	
Adjustment	Paper feed section	51	2	50	Adjustment value of contact pressure of the paper on the main body resist roller	8-3
	Optical unit	26	8	11	Adjustment value (lens shift amount adjustment value) of copy magnification ratio in zoom copying	7-16
		45	1	50	Adjustment value of copy paper lead edge void amount	7-20
		46	1		Adjustment value of copy density (exposure level) in each copy mode and of copy density gradient (exposure gradient)	7-26
					Manual copy mode density level 1 (Not toner save mode)	
					Manual copy mode density level 5 (Not toner save mode)	
					Manual copy mode density level 1 (Toner save mode)	
					Manual copy mode density level 5 (Toner save mode)	
					Auto copy mode density level 1 (Not toner save mode)	
					Auto copy mode density level 5 (Not toner save mode)	
					Auto copy mode density level 1 (Toner save mode)	
					Auto copy mode density level 5 (Toner save mode)	
					Photo copy mode density level 1 (Not toner save mode)	
					Photo copy mode density level 5 (Not toner save mode)	
		47			The AE sensor and the optical section characteristics memory data for the change in the copy lamp application voltage	7-26
		48	1	50	The vertical copy magnification ratio adjustment value	7-15
			2	50	The horizontal copy magnification ratio adjustment value (when the document table is used)	7-16
		50	1		The adjustment value of copy image position on the copy paper	7-19
				50	Set value A	
				50	Set value B	
				50	Set value C	
	Process	44	1		Process correction mode setting	
	Developer unit	25	2		Toner density initial set value	4-5
	SPF unit	48	3	50	The horizontal copy magnification ratio adjustment value (when the document table is used)	7-18
		51	2	50	The adjustment value of contact pressure between the SPF resist roller and the document	8-3
			6		Adjusting value of copy density in the SPF mode	7-28
Setting	Specifications	26	6		Specifications setting by destination	8-8

	Data
JAPAN	00
SEC	01
SECL	02
SEEG	03
SUK	04
SCA	05
Inch series	06
AB series	07
LAG Inch series	08
LAG AB series	11

Setting	Fuser unit	26	13	0	Setting of the main motor operation mode in warming up.	8-8

Code No.	Operation mode	Operation
0	Normal mode	When the fusing temperature reaches the specified level, the main motor stops.
1	Long mode	The main motor keeps rotating until the completion of the warming up.

		43	1	185°C	Fusing temperature set value	8-8
			2	0	Fusing temperature setting value in the power save mode	8-8
	Process	44	1	16	Picture correction mode function setting	

Purpose/kind	Section	Contents				Ref. page
		Main code	Sub code	Default value	Description	
Counter	Total counter	22	5		Used to confirm the total counter value.	8-9
		20	1		Used to reset the maintenance counter.	8-9
		21	1	2	Used to set the maintenance cycle.	8-9
		22	1		Used to confirm the maintenance count value.	8-9
			2		Used to confirm the set maintenance cycle (maintenance preset counter).	8-9
Trouble cancel		14			Used to cancel troubles other than self diag "U2". After cancellation of the trouble, the simulation is also cancelled automatically.	8-12
		16			Used to cancel self diag "U2" trouble. After cancellation of the trouble, the simulation is also cancelled automatically.	8-12

[11] MAINTENANCE

▲ Replacement/Installation ○ Cleaning ☆ Lubrication
× Check (Clean, replace, or adjust as required.) △

Content		40K	80K	120K	160K	200K	240K
Developing	Developer	▲	▲	▲	▲	▲	▲
	Toner supply						
	Seal	×	×	×	×	×	×
Process, peripheral	OPC drum	▲	▲	▲	▲	▲	▲
	Main charger, saw tooth, grid, separation pawl	▲	▲	▲	▲	▲	▲
	Transfer charger wire	○	▲	○	▲	○	▲
	Separation plate (half etching)	▲	▲	▲	▲	▲	▲
	Transfer charger case	○	▲	○	▲	○	▲
Fusing	Fusing lower CL roller	▲	▲	▲	▲	▲	▲
	Fusing upper heat roller	○	▲	○	▲	○	▲
	Fusing bearing	○	▲	○	▲	○	▲
	Fusing gear	○	▲	○	▲	○	▲
	Fusing lower heat roller	○	▲	○	▲	○	▲
	Thermistor	○	○	○	○	○	○
	Fusing upper separation pawl	○	▲	○	▲	○	▲
	Fusing lower separation pawl	○	▲	○	▲	○	▲
Optical	Mirror, lens, reflector	○	○	○	○	○	○
	Sensors	○	○	○	○	○	○
	Drive wire, pulley	×	×	×	×	×	×
	Mirror base rail	☆	☆	☆	☆	☆	☆
	Glass, OC matt	○	○	○	○	○	○
Transport	Manual paper feed section roller	○	○	○	○	○	○
	Cassette paper feed section roller	○	○	○	○	○	○
	Paper transport rollers	○	○	○	○	○	○
	Suction belt (only target destinations) Japan	○	○	○	○	○	○
	Paper transport section paper guide	○	○	○	○	○	○
SPF	Paper feed roller	○	○	○	○	○	○
	Transport roller	○	○	○	○	○	○
	Original transport guide	○	○	○	○	○	○
	OC matt	○	○	○	○	○	○
Other	Gears (drive sections)	☆	☆	☆	☆	☆	☆
	Blank lamp, discharge lamp	○	○	○	○	○	○
	Ozone filter	×	▲	×	▲	×	▲
	Picture quality	△	△	△	△	△	△

[12] ELECTRICAL SECTION

1. System block diagram

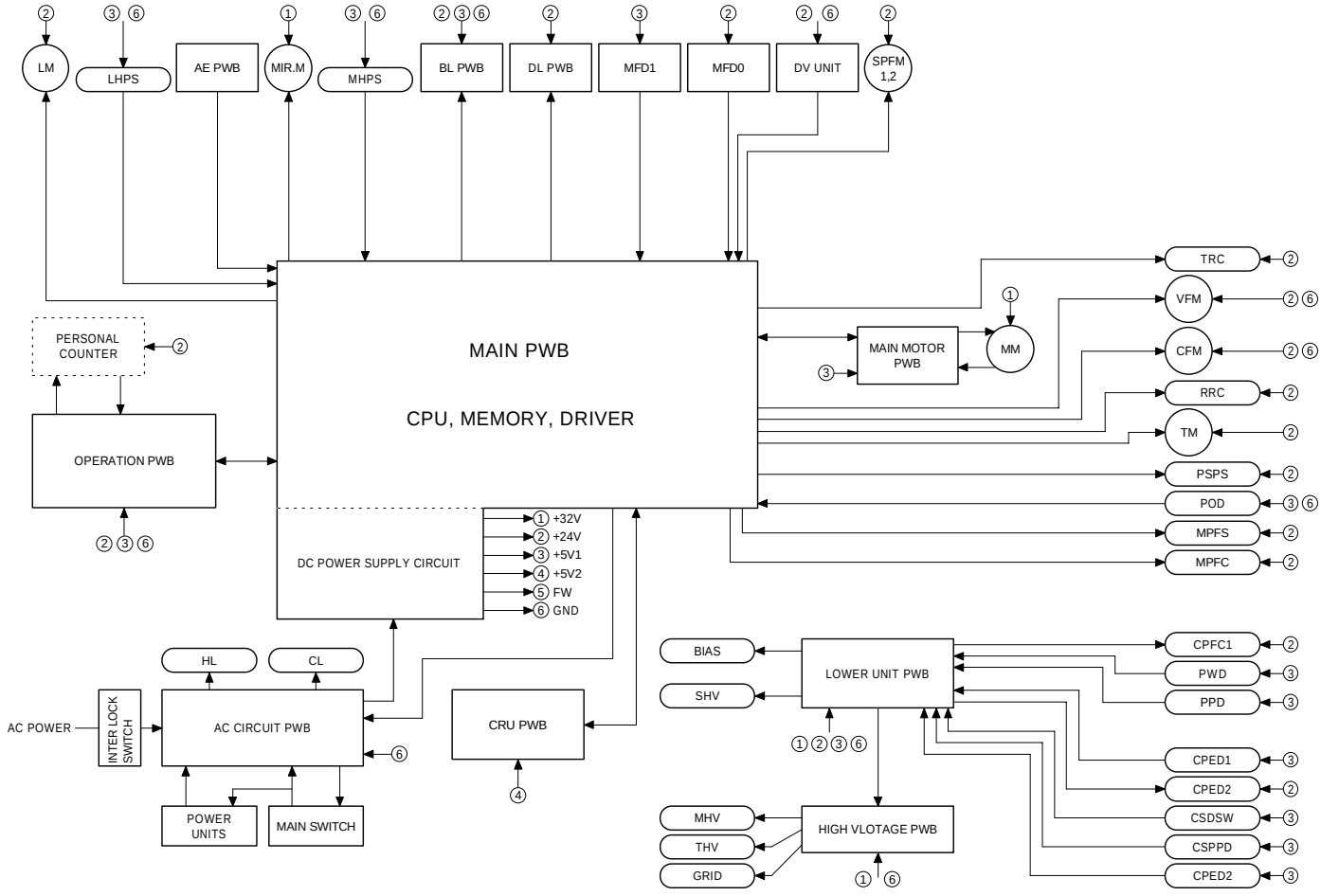

2. System operation at power ON

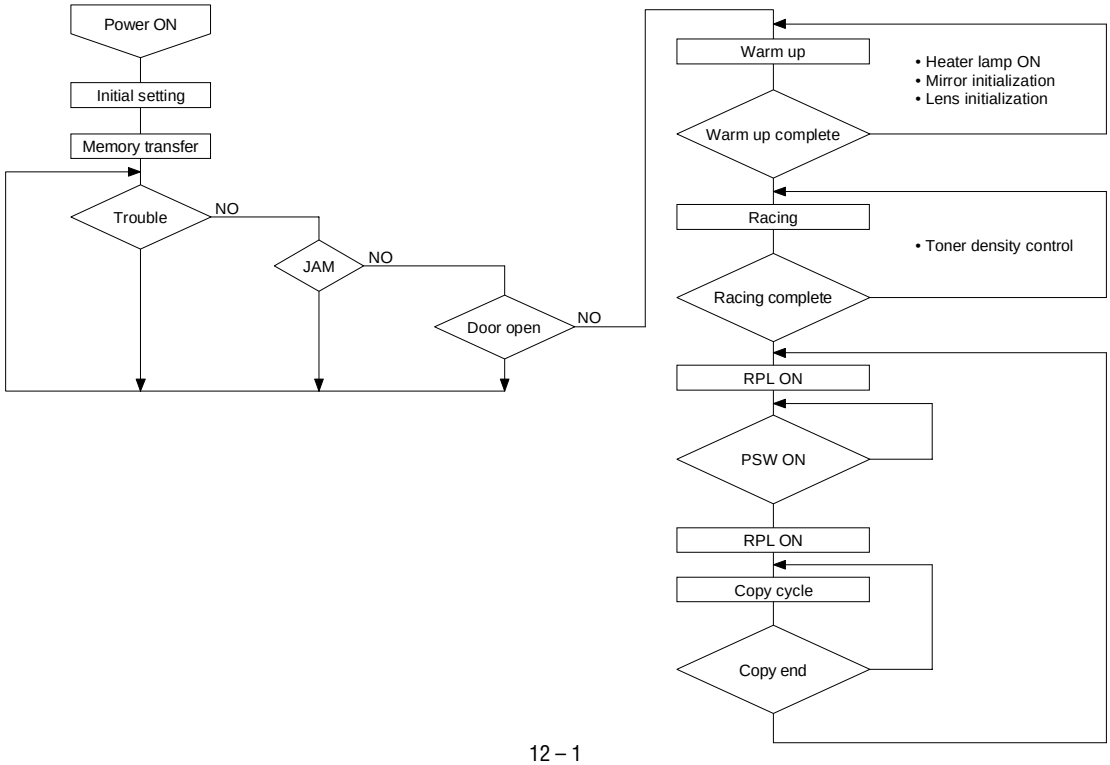

3. Main circuit

(1) Block diagram

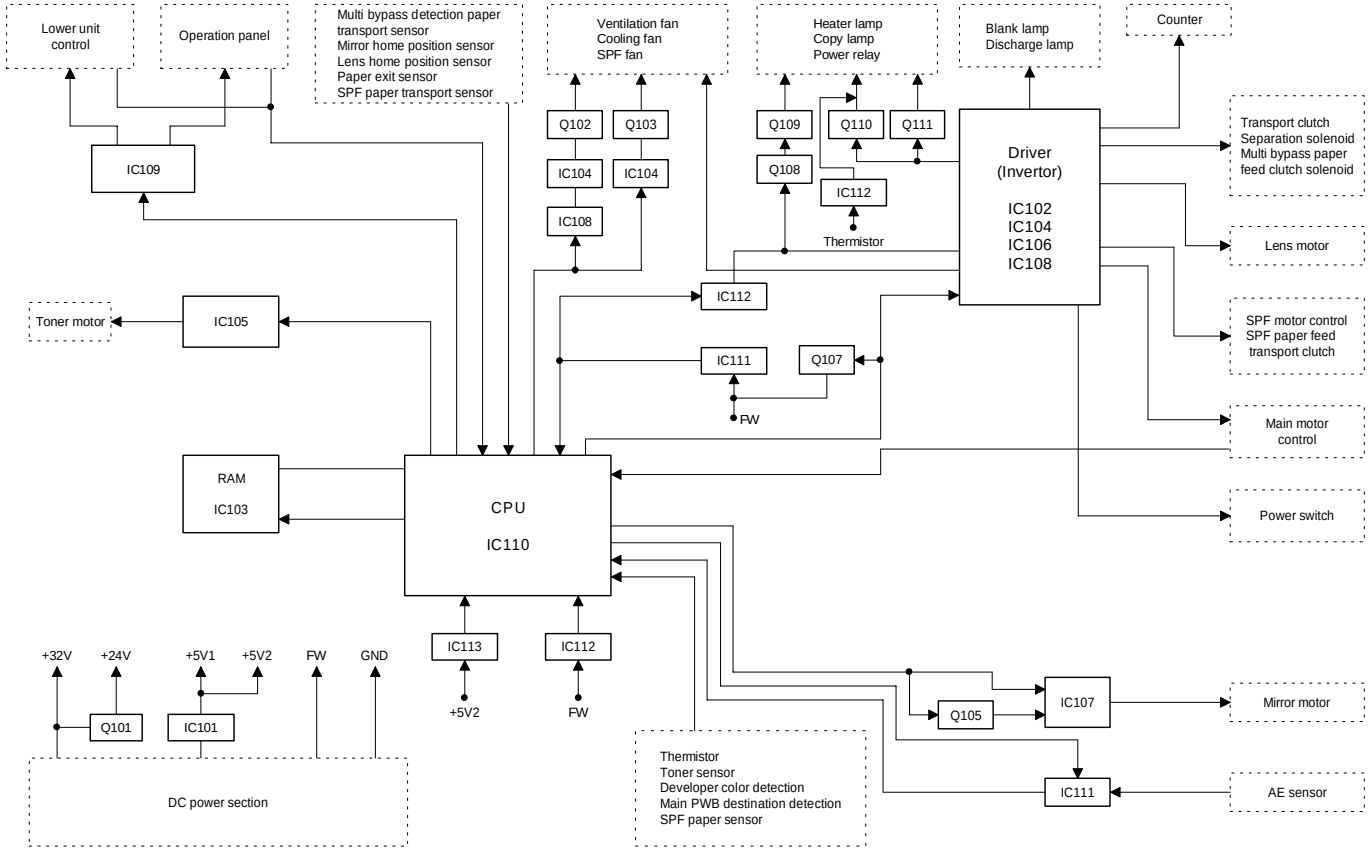

(2) CPU (IC110) M37702

① Outline

The M37702M2-XXXFP is a 16-bit, single-chip microprocessor which employs the high performance silicon gate CMOS process, and it is packed in 80-pin plastic mold flat package. The single chip microprocessor is equipped with a big address space of 16MB, the command cue buffer to execute commands at high speeds, and the data buffer. The CPU is of 16 bit parallel process, and allows selection of 8 bit parallel process mode if necessary.

② Pin arrangement

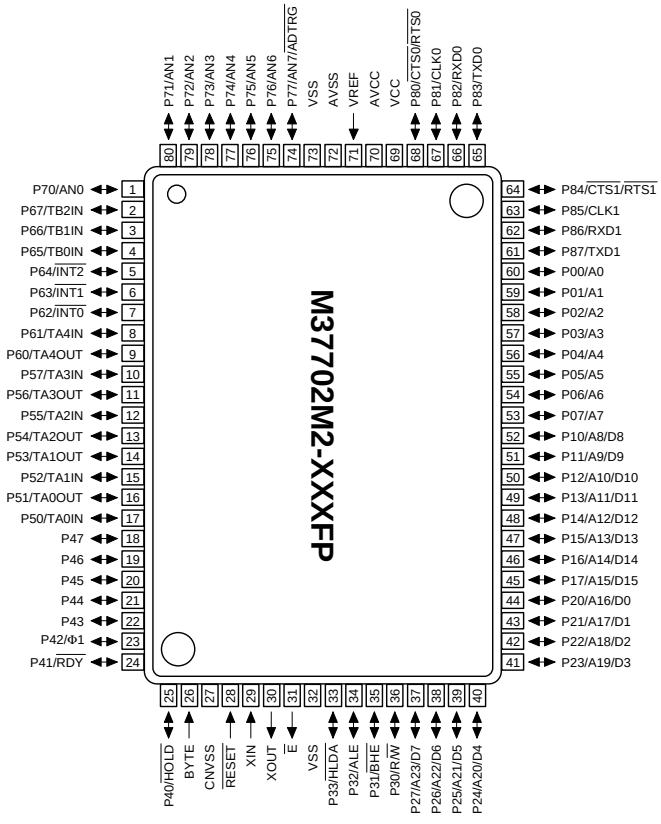

③ Block diagram

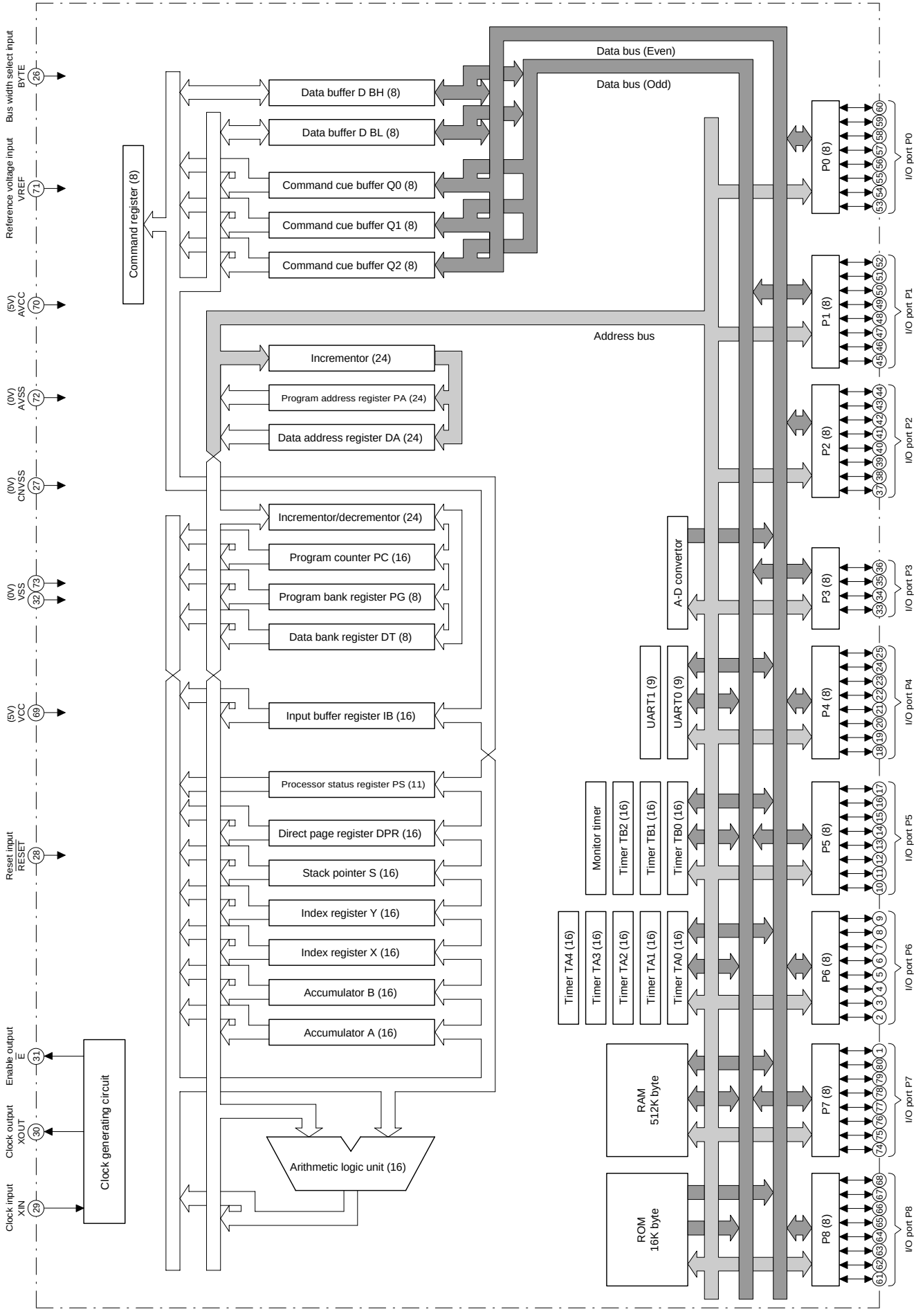

④ CPU: M37702 (IC110) pin signals

Pin No.	Port	Signal name	IN/OUT	H/L	Description
1	P70	AES	IN		Analog input signal (AE sensor)
2	P67	IN1	IN		Lower unit serial parallel IC input 2 port
3	P66	IN0	IN		Lower unit serial parallel IC input 2 port
4	P65	MMRE	IN		Main motor timer input
5	P64	FWS	IN		Power zero cross pulse detection signal
6	P63	MHPS	IN	H	Mirror home position detecting signal ("HIGH at Home position)
7	P62	AEG2	OUT		AE gain select signal
8	P61	AEG1	OUT		AE gain select signal
9	P60	SMPWM	IN/OUT	H	Transport motor timer output clock
10	P57	AEG0	OUT		AE gain select signal
11	P56	CLPWM	OUT	H	Copy lamp control signal
12	P55	HL	OUT	H	Heater lamp control signal
13	P54	MMPWM	OUT	H	Main motor timer output clock
14	P53	PR	OUT	H	Power relay control signal
15	P52	BLPWM	OUT		Blank lamp control signal
16	P51	PSPS	OUT	H	Paper separation solenoid control signal
17	P50	DL	OUT	H	Discharge lamp control signal
18	P47	SCLK	OUT		Data output clock signal to EEPROM
19	P46	SDAT	IN/OUT	—	Serial data I/O to EEPROM
20	P45	LHPS	IN	H	Lens home position detecting signal (HIGH at home position)
21	P44	IMP	IN	—	NC
22	P43	SPFM	OUT	H	SDH cooling fan motor control signal
23	P42	VFM	OUT	H	Ventilation fan motor control signal
24	P41	CFM	OUT	H	Optical system cooling fan motor control signal
25	P40	POD	OUT	H	Paper exit detecting sinal
26	BYTE	BYTE	IN		External data bus select signal ("L" = 16 bit, "H" = 8 bit)
27	CNVss	CNVss	IN	H	Processor mode selection
28	$\overline{\text{RESET}}$	$\overline{\text{RESET}}$	IN	L	Reset signal (Reset at "L")
29	X_{IN}	X_{IN}	IN		Clock IN
30	X_{OUT}	X_{OUT}	OUT		Clock OUT
31	$\overline{E}$	$\overline{E}$	OUT		Enable output
32	Vss	Vss	OUT		Power (GND)
33	P33	PNC	OUT		Personal counter clock
34	P32	TRC	OUT	H	Transport roller clutch
35	P31	NrjStar.	OUT	H	Power switch OFF signal for EnergyStar (Power swith OFF at HIGH)
36	P30	DVF	IN	L	Not used
37	P27	TMb	OUT	H	Toner supply motor drive signal
38	P26	TMa	OUT	H	Toner supply motor drive signal
39	P25	LEMT0	OUT	H	Lens motor drive signal A
40	P24	LEMT1	OUT	H	Lens motor drive signal B
41	P23	LEMT2	OUT	H	Lens motor drive signal –A
42	P22	LEMT3	OUT	H	Lens motor drive signal –B
43	P21	MPFC	OUT	H	Multi paper feed clutch control signal
44	P20	MPFS	OUT	H	Multi paper feed solenoid control signal
45	P17	MFD1	IN		Single/multi input 1 L Not set H Single paper present L Multi H Single paper exhaust
46	P16	MFD0	IN		Single/multi input 2 H L L H
47	P15	MRPS	OUT	H	
48	P14	MRMT0	OUT	H	Mirror motor drive signal $\overline{A}$
49	P13	MRMT1	OUT	H	Mirror motor drive signal $\overline{B}$
50	P12	MRMT2	OUT	H	Mirror motor drive signal –A
51	P11	MRMT3	OUT	H	Mirror motor drive signal –B
52	P10	SRPL	OUT	H	SDF lamp
53	P07	SRRC	OUT	H	Resist roller clutch drive signal
54	P06	SPFC	OUT	H	Paper feed roller clutch drive signal
55	P05	SME	OUT		Transport motor ON/OFF control signal

Pin No.	Port	Signal name	IN/OUT	H/L	Description
56	P04	SMG	OUT	H	Transport motor gain signal
57	P03	SPPD	IN	H	Paper entry detecting signal
58	P02	KEY2	IN	L	Operation PWB key input signal
59	P01	KEY1	IN	L	Operation PWB key input signal
60	P00	KEY0	IN	L	Operation PWB key input signal
61	P87	OP-DATA	OUT		Serial data output to operation PWB
62	P86	NC	—	—	(NC)
63	P85	OP-CLK	OUT		Data output clock signal to operation PWB
64	P84	OP-LATCH	OUT		Data latch signal to operation $\overline{\text{PWB}}$
65	P83	UN-DATA	OUT		Serial data output to lower unit PWB
66	P82	NC	—	—	(NC)
67	P81	UN-CLK	OUT		Data output clock signal to lower unit PWB
68	P80	UN-LATCH	OUT		Data latch signal to lower unit PWB
69	Vcc	Vcc			Power (5V)
70	AVcc	AVcc			Analog/Digital convertor reference power voltage
71	V_{REF}	V_{REF}			Analog/Digital convertor reference voltage input
72	AV_{SS}	AV_{SS}			Analog/Digital convertor ground pin
73	Vss	Vss			Power (GND)
74	P77	ANS	IN		Analog input signal (SPF sensor input)
75	P76	MBT	IN		Analog input signal (Main PWB destination setting)
76	P75	CLV	IN		Analog input signal (Copy lamp control)
77	P74	RTH	IN		Analog input signal (Fusing thermistor)
78	P73				Not used
79	P72				Not used
80	P71	TCSA	IN		Analog input signal (Toner density sensor)

(3) Start/stop control circuit

1 General

The circuit senses ON/OFF state of the power source to control start/stop of the circuits.

The DC power section supplies power voltages (V_H=+32V, VB=+24V, VC=+10V, VD1=5V, VD2=5V).

After the power voltage reaches the specified level, the circuit operation is started. Before the power voltage falls below the specified level, the circuit operation is stopped, preventing against malfunctions.

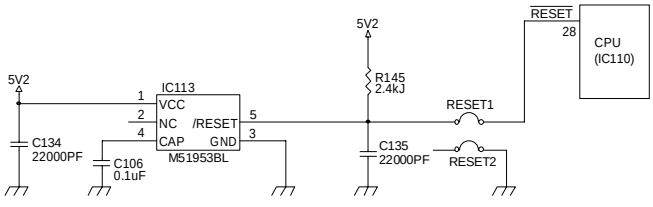

(4) Heater lamp control circuit

① General

The heater lamp control circuit detects the heat roller surface temperature with the thermistor, converts it into voltage level, and outputs it to the CPU analog input pin.
The CPU converts the analog voltage into digital signal level, compares it with the value set by simulations, turns on/off the heater lamp according to the level, and maintain the heat roller surface temperature at a constant level.

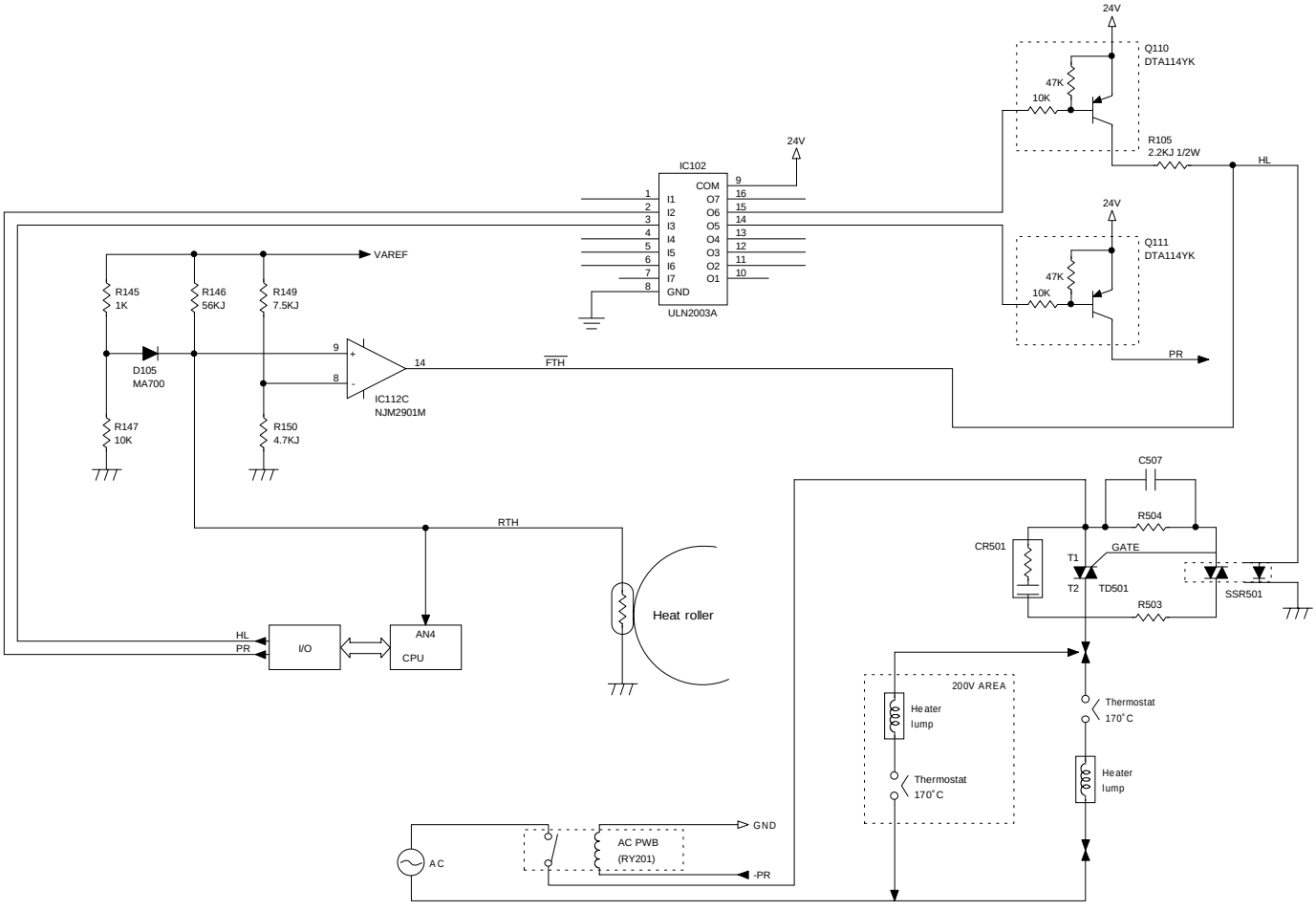

When the heat roller surface temperature is low, the thermistor resistance increases. When the surface temperature is high, the resistance decreases. The thermistor terminal voltage, therefore, increases when the heat roller surface temperature is low, and decreases when the temperature is high. The thermistor terminal voltage is inputted to the CPU analog port, and the CPU controls on/off of the heater lamp with the input voltage level.

[High temperature protecting circuit in hung up of the CPU]

The voltage at IC133 3 pin (reference voltage) is divided by R149 and R150, and the thermistor terminal voltage is applied to IC112 9 pin.
When 9 pin voltage is lower than 8 pin voltage (the heat roller surface temperature: about 230 degree C), IC112 14 pin becomes LOW. As a result, HL signal is pulled to the GND level and the heater lamp lighting signal is not generated. (IC112 output 14 pin is normally HIGH (Open state).)

[When the heat roller surface temperature is lower than the set temperature]

a. Since the thermistor pin voltage is higher than the set level, output signal HL from the CPU becomes HIGH.

b. HL signal is passed through IC102, TR, and Q110 to the solid state relay.
When, therefore, HL signal is LOW, the internal triac turns on.

c. When the internal traic turns on, a pulse is applied to the gate of the external triac to allow a current to flow from the power source through the heater lamp to the triac, thus lighting the heater lamp.

[When the heat roller surface temperature is higher than the set temperature]

a. Since the thermistor pin voltage is lower than the set level, output signal HL from the CPU becomes low.

b. HL becomes low, SSR is turned off, the external triac is turned off, and the heater lamp is turned off.

[Q110]

Q110 protects the heater lamp from lighting due to trouble in the harness of the heater lamp drive signal.

(5) Driver circuit (Solenoid, magnetic clutch)

① General

The control signals of each load outputted from the CPU and I/O cannot drive the load directly. The output, therefore, is delivered to the load through the driver IC.

② Operation

The driver circuit forms a Darlington circuit with two transistors to obtain a large drive current (load current) from a small input current (I/O output current). When the driver input voltage is HIGH (+5V), the transistor is turned on to flow a current in the arrow direction, operating the load. When the driver is turned on, the driver output pin voltage is 0V.

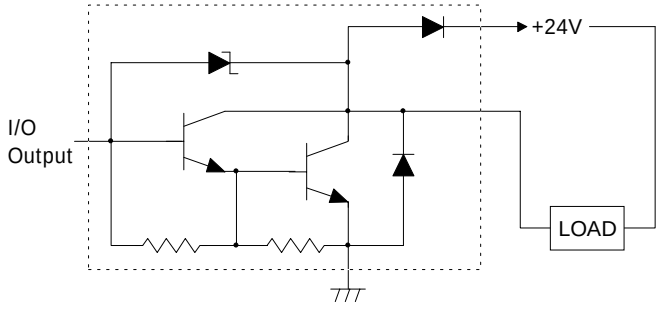

(6) Stepping motor drive circuit

① General

The driver circuit drives the lens drive motor.

A: Stepping motor phase A coil drive signal
B: Stepping motor phase B coil drive signal
A: Stepping motor phase A coil drive signal
B: Stepping motor phase B coil drive signal

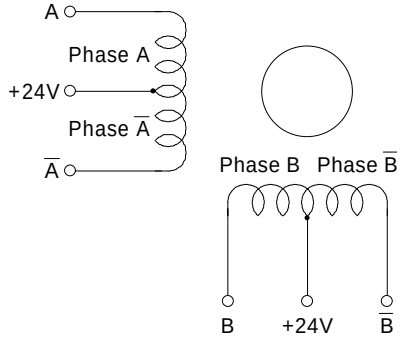

Stepping motor time chart

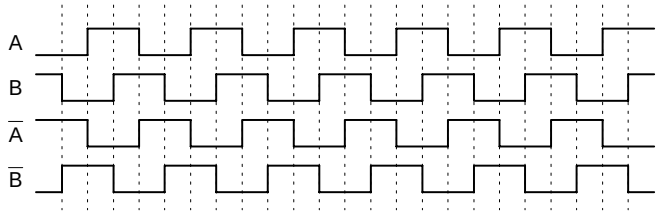

Drive signal	Lens drive
A	LEMT0
B	LEMT1
C	LEMT2
B	LEMT3

(7) AE (Auto Exposure) sensor circuit

The AE circuit is composed of the AE sensor PWB which is composed of the photo diode, and the I-V convertor circuit, and the amplifier circuit on the control PWB.

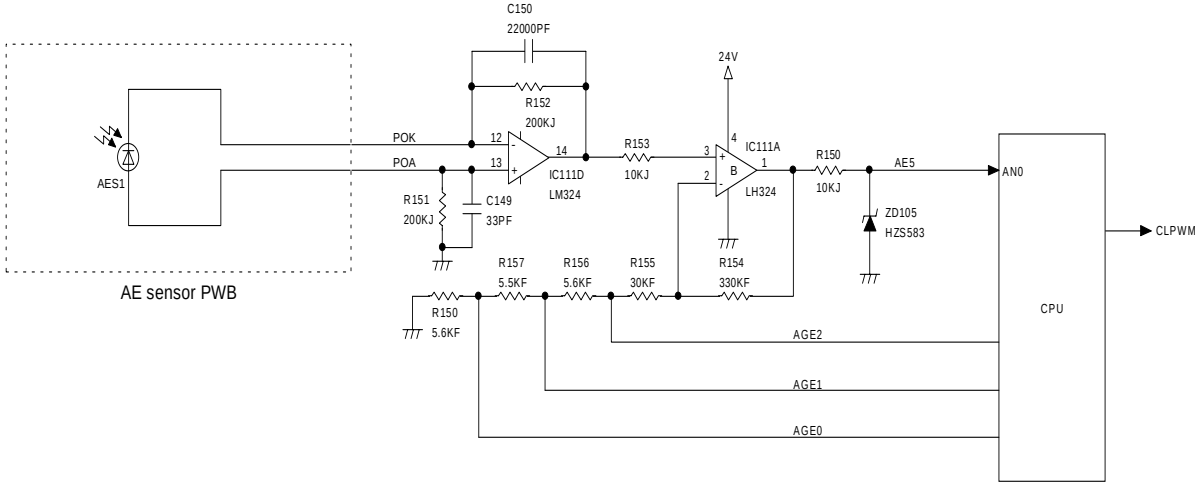

Operation amplifier A performs I-V conversion of the original density level (minute current) from the sensor. Operation amplifier B amplifies the output of operation amplifier A to a suitable level for inputting to the CPU.

The amplifying level is automatically set by selecting the AE gain signal ($\overline{AEG0}$ ~ $\overline{AEG2}$) outputted from the CPU when simulations SIM 47 is executed.

AE operation is performed by the software in the control PWB. When a reflected ray enters the sensor, a voltage corresponding to the light quantity is inputted to the CPU. The CPU compares the input voltage and the copy lamp application voltage and controls the copy lamp voltage so that the exposure level corresponds to the original density.

(8) Toner supply motor drive circuit

IC104 is the motor control IC which drives the toner supply motor with the pulse signals (TMa, TMb) outputted from the I/O chip.

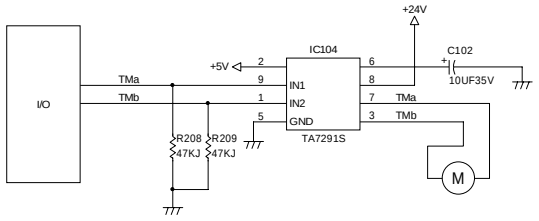

Internal circuit

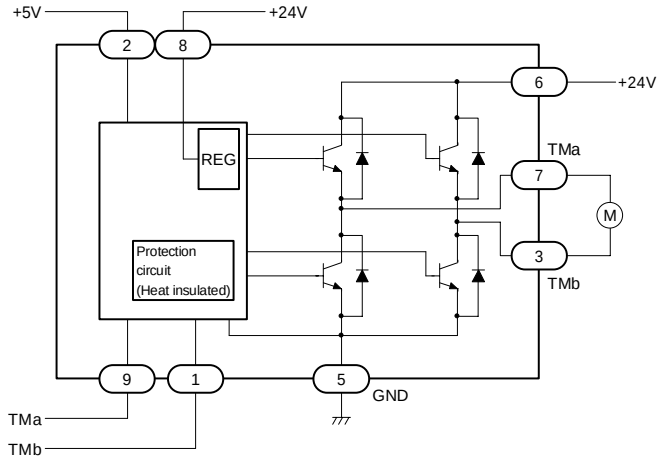

Truth value table

Input		Output		Mode
TMa	TMb	TMa	TMb	
L	L	∞	∞	Stop
H	L	H	L	CW/CCW
L	H	L	H	CCW/CW
H	H	L	L	Brake

∞: High impedance

(9) Reset IC (IC113)

① Outline

The M51953 BL is the most suitable semiconductor IC for detecting the power voltage to reset the CPU and every type of logic circuit. It is equipped with the delay circuit to provide delay time just by adding an external capacitor.

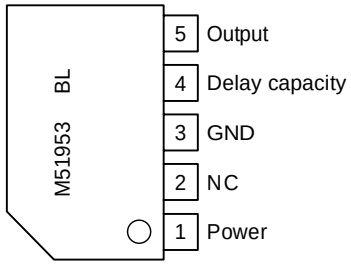

External view 5P5

② Operation

After td (= 30msec) from when the voltage exceeds 4.25V after power rising, the output becomes HIGH.
"td" is set by the external capacitor.

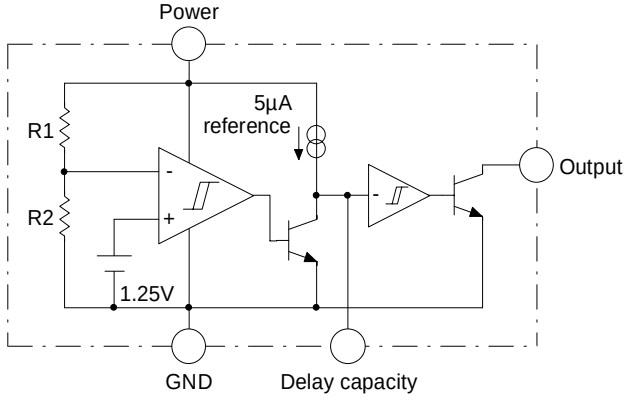

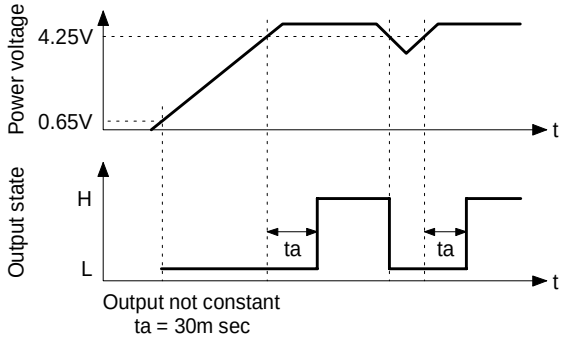

(10) Copy lamp control section

The change in the copy lamp exposure level is adjusted by changing the ON period duty of the output pulse (CLPUM) from the CPU and controlling the copy lamp voltage. Fig. 1 and Fig. 2 show the circuit diagram and the waveform.

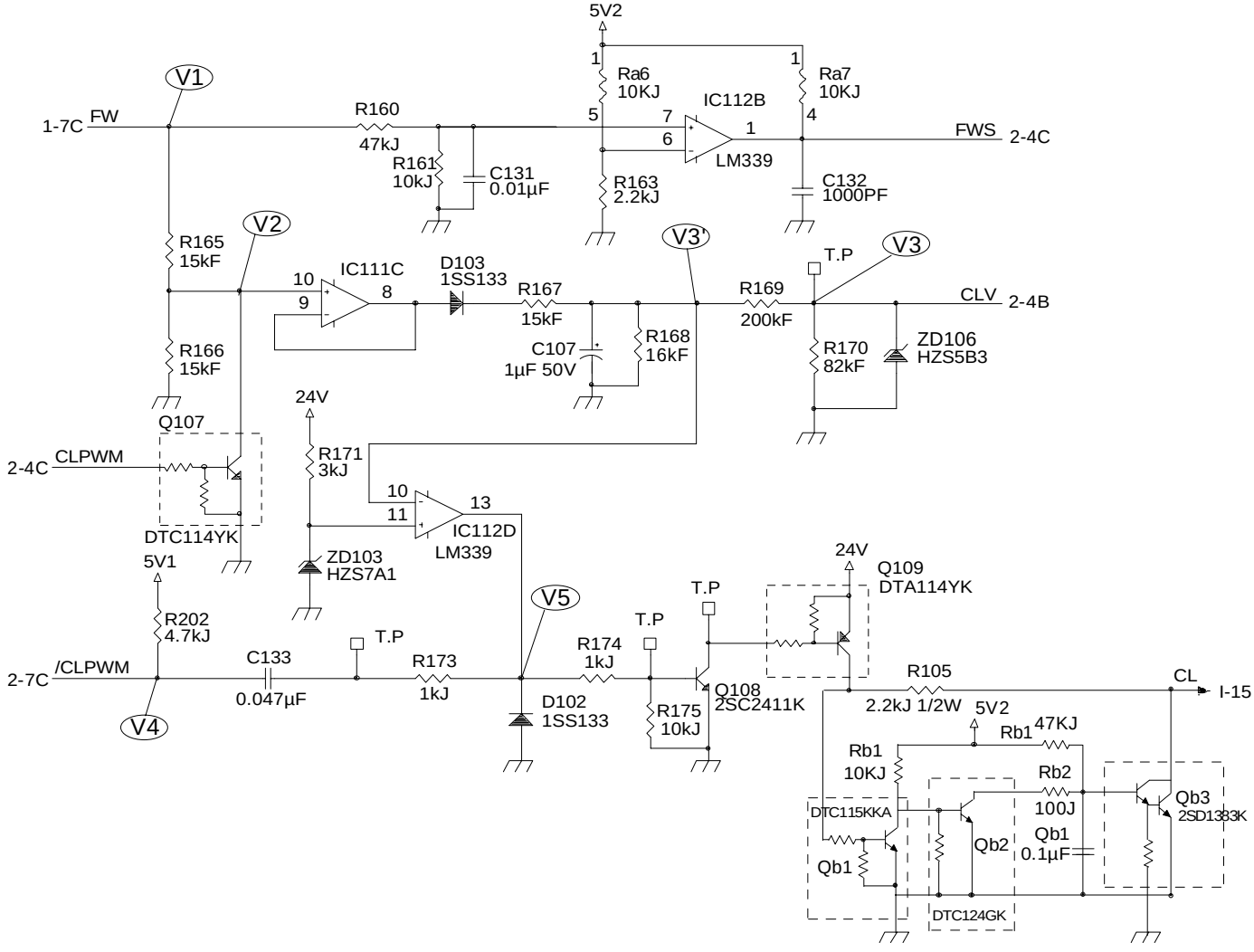

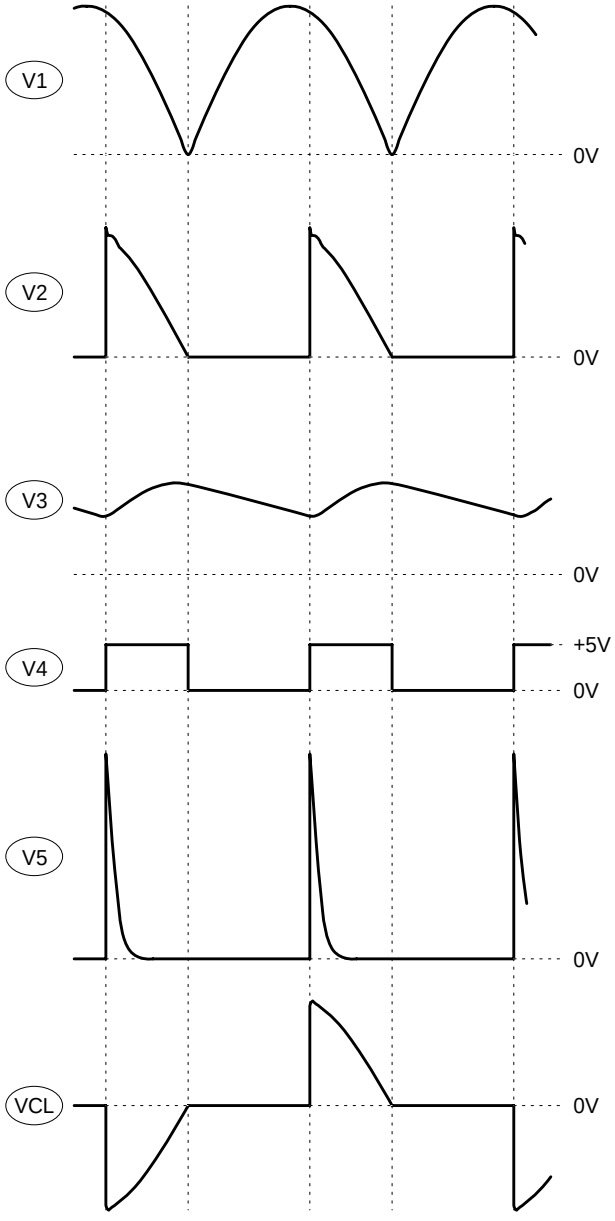

The copy lamp is switched by the triac. At the rising of CLPWM signal (V4), the trigger signal CL is sent to the triac to light the lamp. The lamp will goes off later at the zero cross point of V1 waveform.
The CPU reads the control voltage level (CLV) corresponding to the change in the copy lamp voltage, and compares it with the reference level to change the ON period of the output pulse.
The CLV forms the same waveform as the copy lamp voltage waveform where the Ac input's full rectified waveform (FW) is disabled for ON periods of the pulse. It is converted into a DC level by the low pass filter composed of C107 and R168, and is inputted to the CPU.

The relationship between the CLV and the pulse ON period is as shown in the figure below:

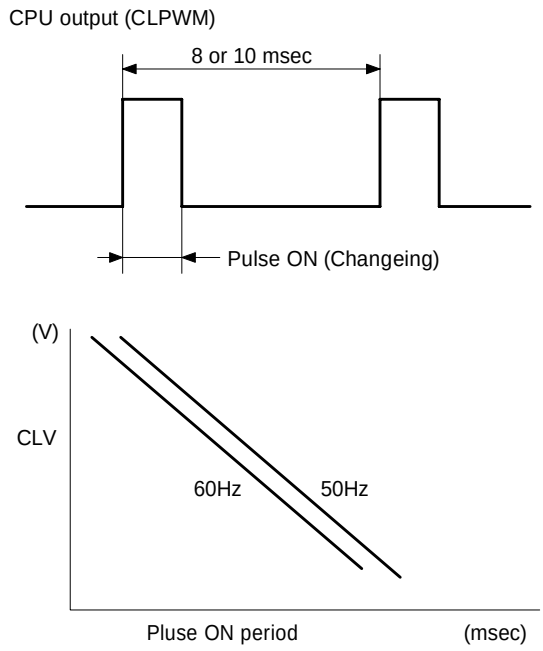

- When the pulse ON period is shorter, the CLV becomes higher, and vice versa.
- The pulse ON period rises at he AC zero cross timing and is driven by the duty.
- The copy lamp lighting signal generates positive pulses with C133 at falling of the CPU output, and inputs the pulses through the two-stage transistor to the photo triac.
- Section A in the figure shows the circuit which prevents against application of an overvoltage to the copy lamp.
  When the pulse on period is abnormally short, the DC level applied to the IC112 10 pin becomes higher than the reference voltage of 11 pin, driving the 13 pin output to the GND level.
  Therefore the lighting signal is not transmitted to R174 and later section and the lamp is not lighted.
  By setting the reference voltage to a level not exceeding the rated voltage, an abnormal lighting is avoided.

① When the AC input voltage becomes low (with the copy lamp control voltage at constant):
The FW peak at point (V1) becomes lower to decrease the CLU voltage at (V3).

Then the CPU shortens the output pulse ON period until the CLV reaches the reference level, increasing the power applied to the coy lamp.

② When the Ac input voltage becomes higher (with the copy lamp control voltage at constant):
The reversed operations of ① are performed to lengthen the output pulse ON period, decreasing the current flowing through the copy lamp.

③ When the copy lamp control voltage is decreased:
The CLV reference level in the CPU is lowered. The output pulse ON period is lengthen until the CLV reaches the level, decreasing the power supplied to the copy lamp.

④ When the copy lamp control voltage is increased:
The reversed operations of ③ are performed, to shorten the output pulse ON period, increasing the power applied to the copy lamp.

4. Operating section

(1) Outline

The operating circuit is composed of the key matrix circuit and the display matrix circuit.
Key detection: Keys are detected with signal matrix of W0 (Q25) ~ W7 (Q32) and KEY0 ~ KEY2.
With W0 signal at LOW (GND) and W1 ~ W7 at HIGH (open), the level of KEY0 ~ KEY2 is checked and "H" or "L" state of 4K, 2K and 3K in the key matrix is judged to judge ON/OFF.
For W1 ~ W7, switching is made every 2 msec for judgement.

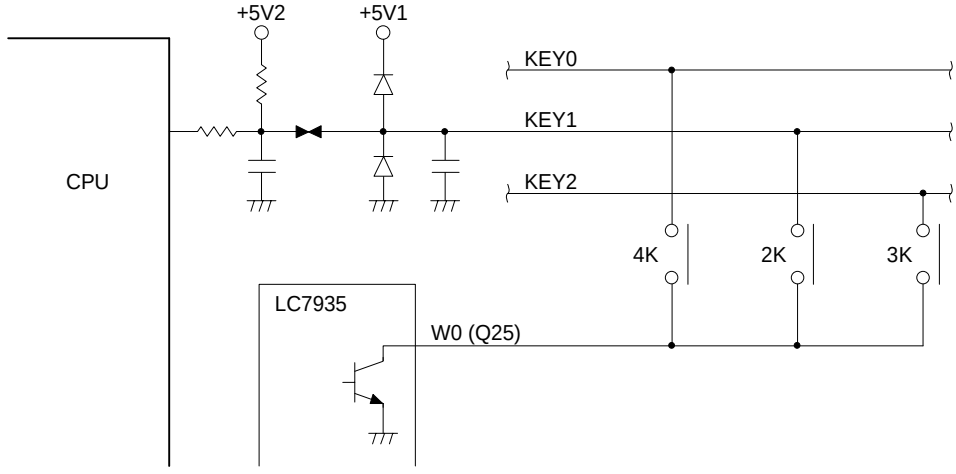

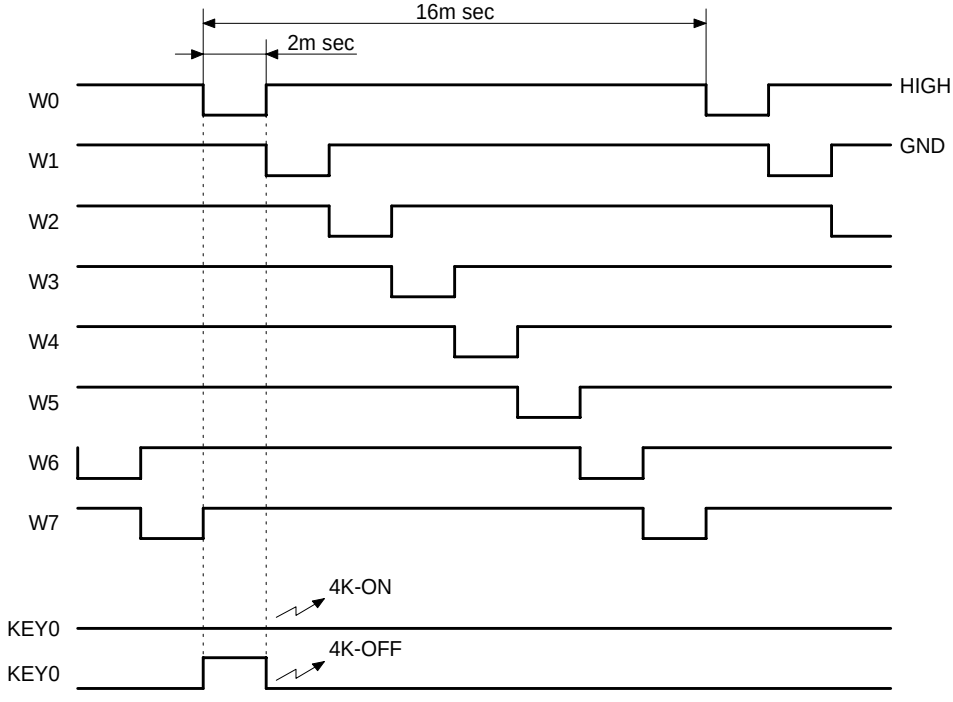

(2) Display circuit

Control is performed with the data signal and the control signal from the control circuit.

① Block diagram

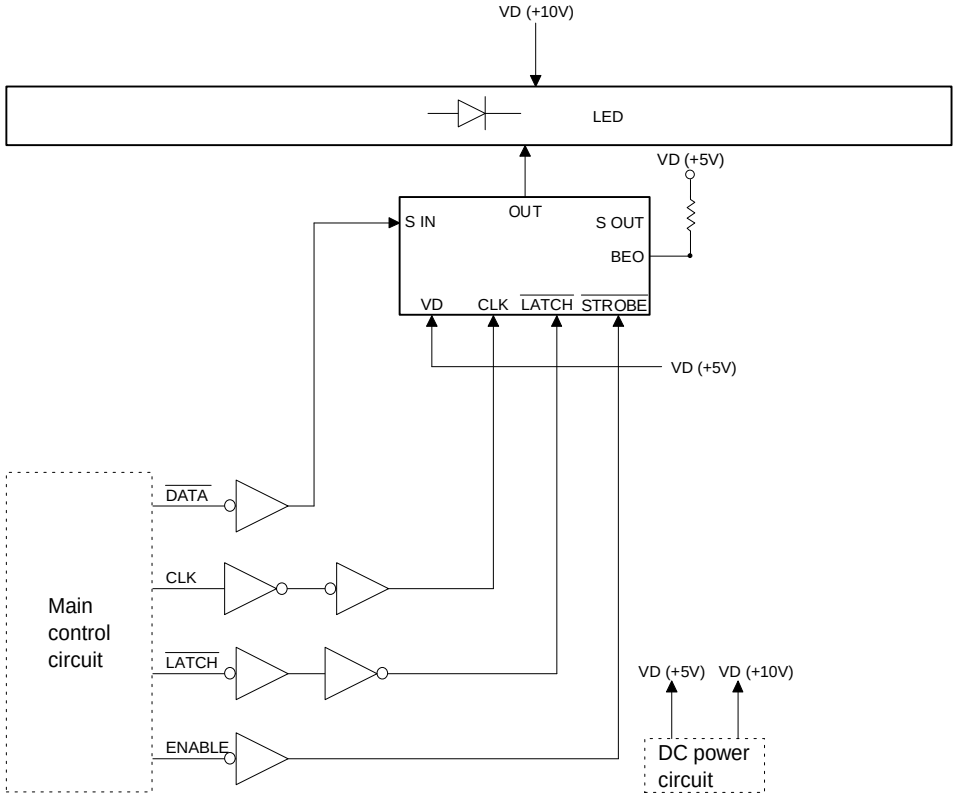

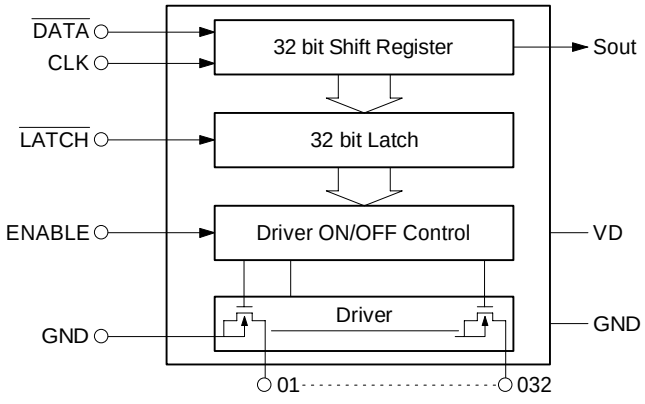

② Operation

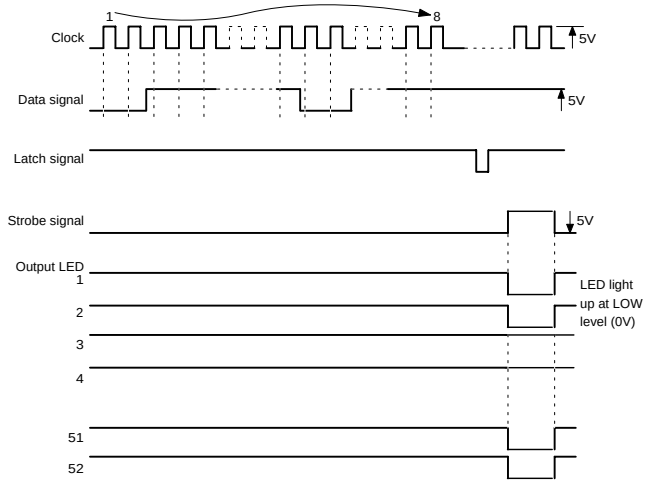

DAta signal (8 bit) sent from the main control PWB is shifted at the rising timing of the clock and retained at the rising timing of the latch signal.
The retained data is outputted when STROBE signal becomes HIGH (5V).

(3) LED display

The LED is lit up by the signal matrix of MDL0 (Q1) ~ MDL1 (Q2) and F0 (Q3) ~ F20 (Q23).
By turning on/off ports F0 ~ F20 with the timing of MDL0 and MDL1, the LED at the matrix cross point is lighted up.

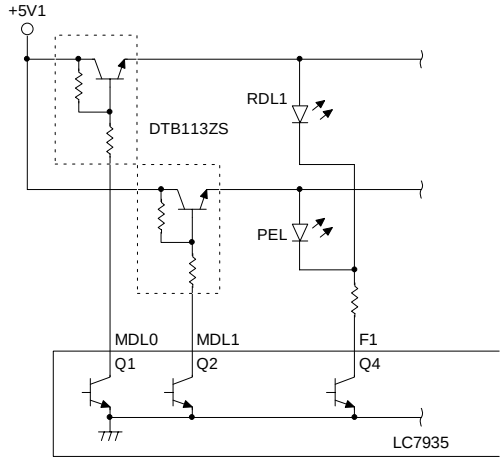

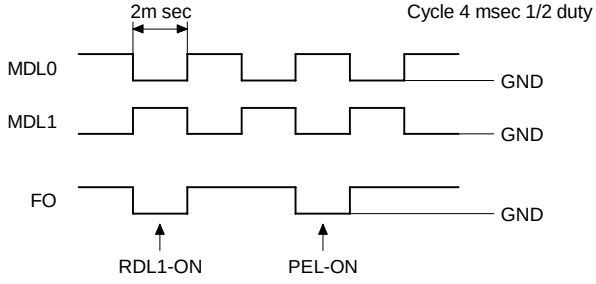

5. Power section

Each AC voltage generated by the power transformer in the AC PWB unit is full-wave rectified and smoothed to stabilize each voltage (UH, UB, VD) in the main PWB side, and is supplied to loads.

(1) Signal name and output voltage

GND: 0V
VH: +30 ~ 44V (Separated into 24V and 32V supply in the main PWB.)
VD: +24V ~ 35V (Forms 5V supply in the main PWB.)
FW: Full-wave rectification

- AC PWB unit

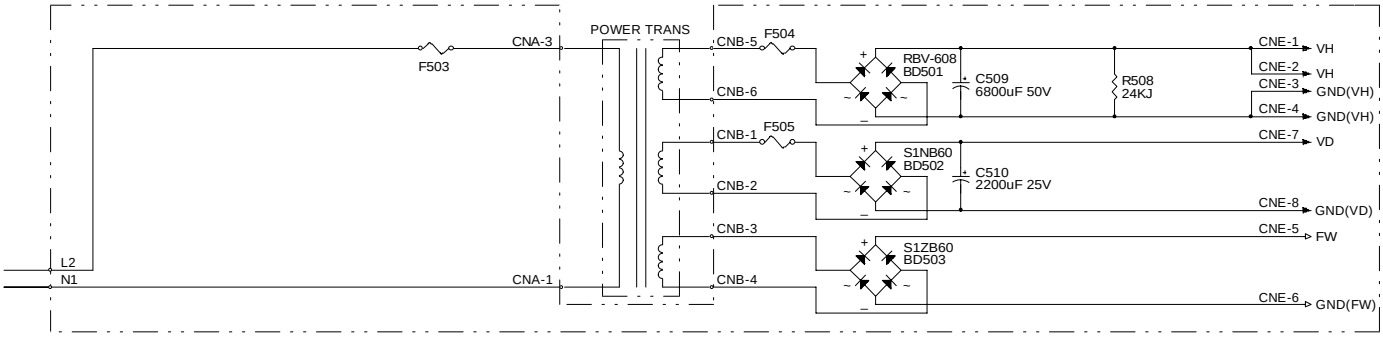

- In the main PWB unit

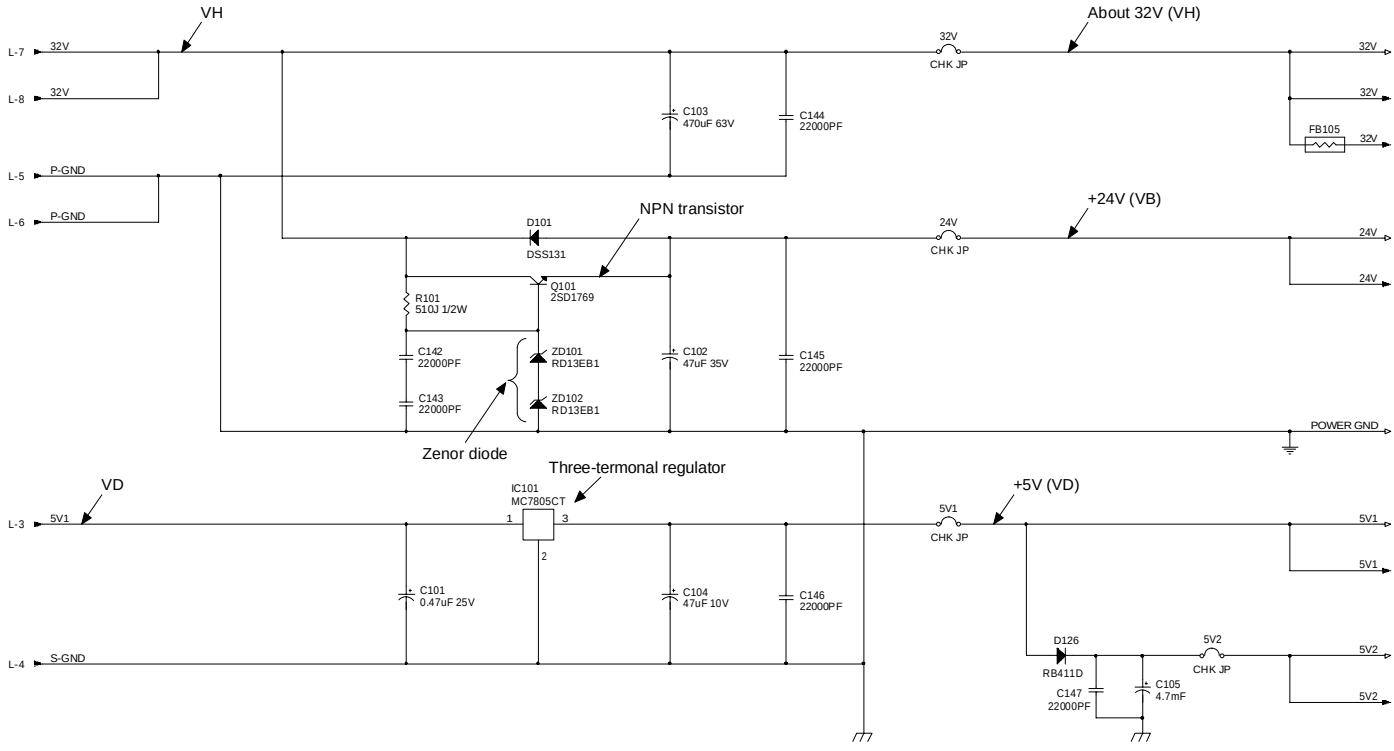

CAUTION FOR BATTERY REPLACEMENT

(Danish) ADVARSEL !

Lithiumbatteri – Eksplosionsfare ved fejlagtig håndtering.
Udskiftning må kun ske med batteri
af samme fabrikat og type.
Levér det brugte batteri tilbage til leverandoren.

(English) Caution !

Danger of explosion if battery is incorrectly replaced.
Replace only with the same or equivalent type
recommended by the manufacturer.
Dispose of used batteries according to manufacturer's instructions.

(Finnish) VAROITUS

Paristo voi räjähtää, jos se on virheellisesti asennettu.
Vaihda paristo ainoastaan laitevalmistajan suosittelemaan
tyyppiin. Hävitä käytetty paristo valmistajan ohjeiden
mukaisesti.

(French) ATTENTION

Il y a danger d'explosion s' il y a remplacement incorrect
de la batterie. Remplacer uniquement avec une batterie du
même type ou d'un type équivalent recommandé par
le constructeur.
Mettre au rebut les batteries usagées conformément aux
instructions du fabricant.

(Swedish) VARNING

Explosionsfara vid felaktigt batteribyte.
Använd samma batterityp eller en ekvivalent
typ som rekommenderas av apparattillverkaren.
Kassera använt batteri enligt fabrikantens
instruktion.

SHARP

COPYRIGHT © 1997 BY SHARP CORPORATION
All rights reserved.
Printed in Japan.
No part of this publication may be reproduced,
stored in a retrieval system, or transmitted.
In any form or by any means,
electronic, mechanical, photocopying, recording, or otherwise,
without prior written permission of the publisher.

SHARP CORPORATION
Printing Reprographic Systems Group
Quality & Reliability Control Center
Yamatokoriyama, Nara 639-11, Japan
1997 October Printed in Japan Ⓢ

SF-1014

SHARP PARTS GUIDE

CODE: 00ZSF1014PG1E

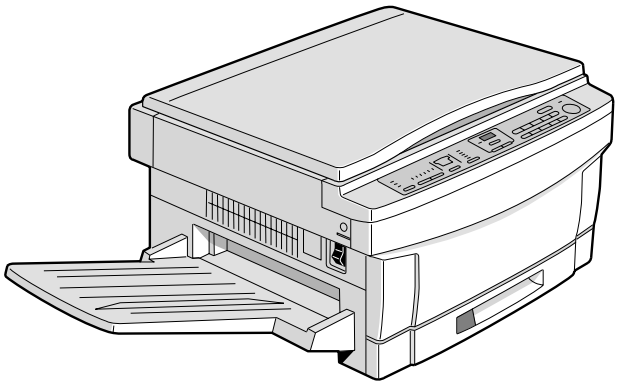

Copier

MODEL SF-1014

CONTENTS

1 Exteriors
2 Original cover unit
4 Operation panel
5 Upper frame
6 Optical unit
7 Mirror holder unit
8 Light source unit
9 Developing unit
10 Toner hopper unit
11 Fusing unit
12 Main drive unit
13 Lower frame
14 High voltage unit
15 TC case unit
16 Single paper feeding unit
18 250 Tray paper feeding unit
19 250 Tray
20 Main PWB
21 Operation PWB
22 AC circuit PWB
23 Lower unit PWB
25 Packing material & Accessories
26 SRU unit
• **SF-MF14**
51 Multi manual paper feeding unit
■ Index

SHARP CORPORATION

This document has been published to be used for after sales service only.
The contents are subject to change without notice.

DEFINITION

The definition of each Rank is as follows and also noted in the list

A : Parts necessary to be stocked as High usage parts.

B : Parts necessary to be stocked as Standard usage parts.

C : Low usage parts.

D : Parts necessary for refurbish.

E : Unit parts recommended to be stocked for efficient after sales service.
Please note that the lead time for the said parts may be longer than normal parts.

S : Consumable parts.

Please note that the following parts used in Copier under the same description are classified into A or B Rank depending upon the place used.

Example: Gear made of Metal, Sprocket, Bearing, Belt made of Rubber, Spring clutch mechanism.

A Rank : The parts which may be with the revolution or loading.

B Rank : Parts similar to A Rank parts, but are not included in Rank A.

Because parts marked with "⚠" is indispensable for the machine safety maintenance and operation, it must be replaced with the parts specific to the product specification.

Other than this Parts Guide, please refer to documents Service Manual and Circuit Diagram of this model.
Please use the 13 digit code described in the right hand corner of front cover of the document, when you place and order.
For U.S. only-Use order codes provided in advertising literature.
Do not order from parts department.

---

1 Exteriors

NO.	PARTS CODE	PRICE RANK	NEW MARK	PART RANK	DESCRIPTION
1	CCAB-0001QS04	AY	N	D	Front exterior A
2	GCAB-0795FCZZ	AU		D	Left exterior
3	XHBSE40P10000	AA		C	Screw (4×10)
4	LSŌU-0129FCZ1	AT		D	Delivery tray
5	GCAB-0796FCZZ	AY		D	Rear exterior upper
6	GCAB-0797FCZZ	AS		D	Rear exterior lower (100V series)
	GCAB-0797FCZ1	AS		D	Rear exterior lower (200V series)
7	GCAB-0794FCZZ	AQ		D	Right exterior upper
8	CFiX-0461FC02	AU		C	Table glass fixing plate L (AB series)
	CFiX-0461FC03	AS		C	Table glass fixing plate L (inch series)
9	PGLSP0081FCZZ	AY		B	Table glass
10	LX-BZ0750FCZZ	AB		C	Screw (3×6)
11	PCŌVP1226FCZ3	AW		C	Frame cover
12	MLEVP0581FCZ1	AD		C	OP lever
13	CSHT-0061FC01	AG		C	Inter lock switch shutter
14	MSPRT1565FCZ1	AB		C	Rack return spring
15	XEBSD30P08000	AA		C	Screw (3×8)
16	PCŌVP1227FCZZ	AE		C	Fusing connector cover
17	TCAUA0770FCZZ	AB		C	Service caution label
19	XHBSE40P08000	AA		C	Screw (4×8)
20	TLABH0013QSZZ	AK		C	Maintenance inspect label

1 Exteriors

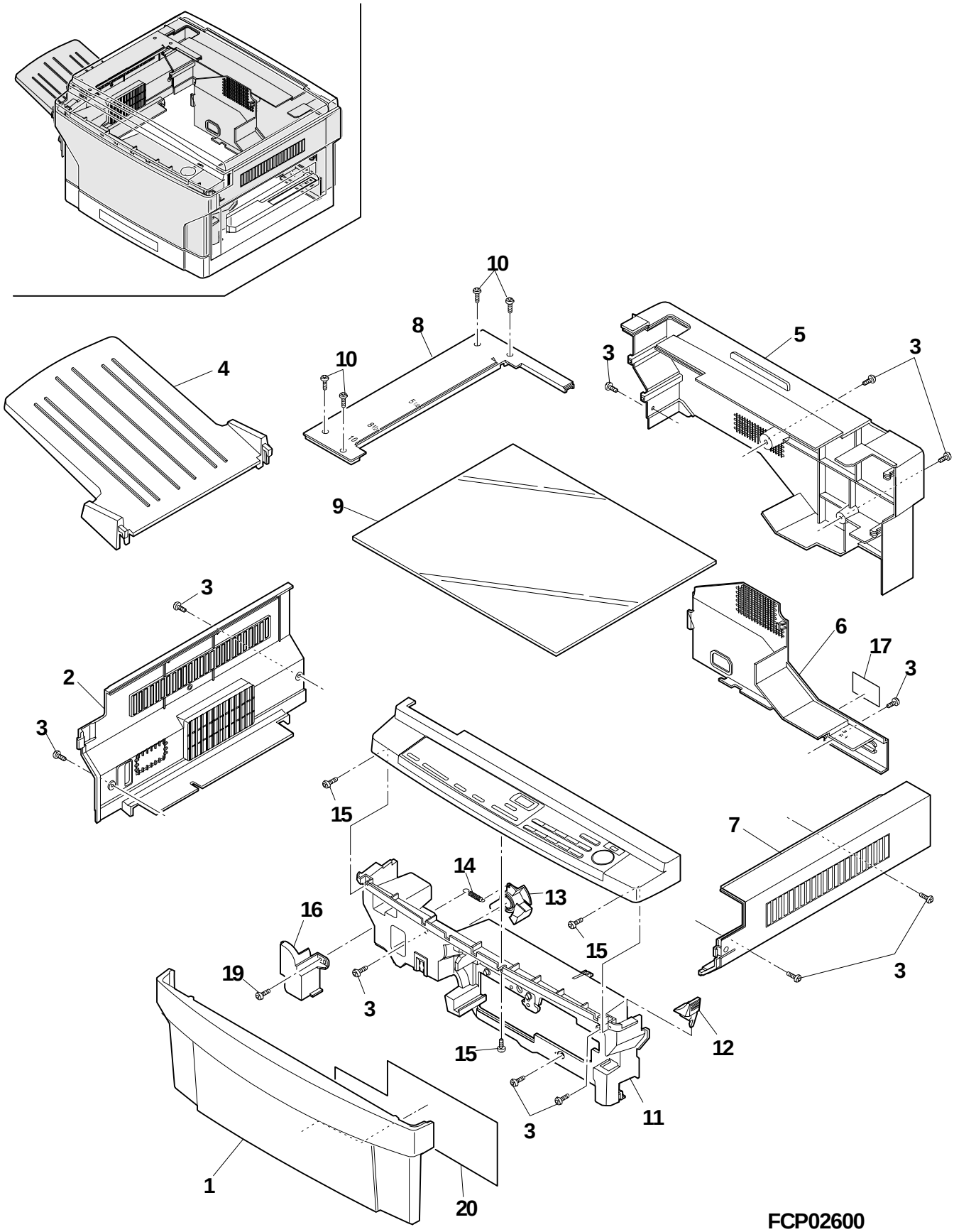
10
8
10
4
5
3
3
9
3
2
3
6
17
3
15
7
14
13
16
15
19
3
3
12
15
11
3
1
20
FCP02600

2 Original cover unit

NO.	PARTS CODE	PRICE RANK	NEW MARK	PART RANK	DESCRIPTION
1	G C Ō V H 0 2 3 3 F C G Z	AM		D	Original cover
2	G C Ō V H 0 2 3 4 F C G Z	AY		D	Original cover
3	P S H E Z 4 1 3 8 F C Z Z	AV		D	OC sheet
4	T L A B H 0 0 1 9 Q S Z Z	AE		C	Condition label E4

2 Original cover unit

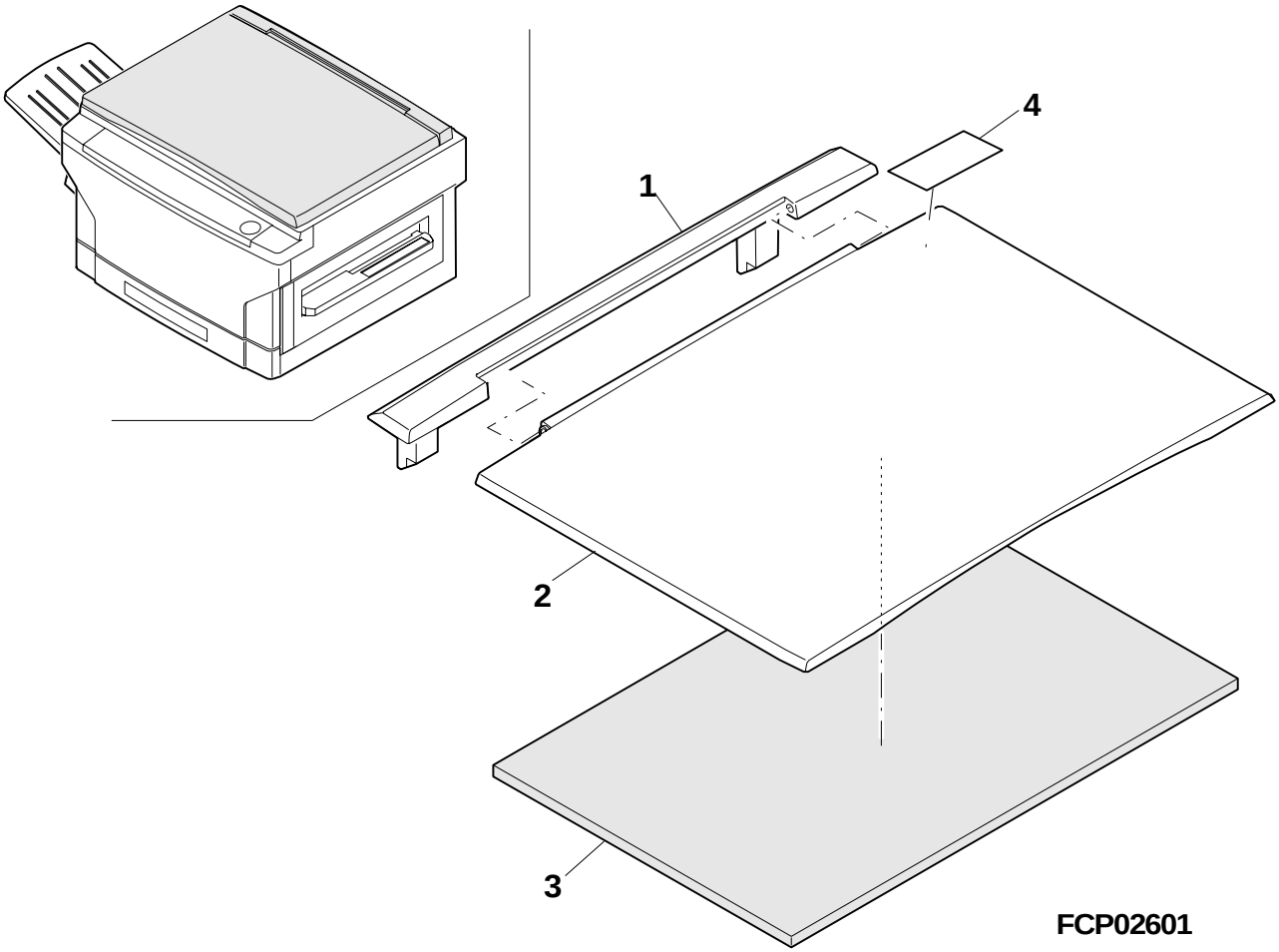

4 Operation panel

NO.	PARTS CODE	PRICE RANK	NEW MARK	PART RANK	DESCRIPTION
1	CBTN-0185FC01	AF		C	Clear key
2	CBTN-0183FC31	AH		E	Copy key unit
3	HPNLC0001QSZZ	AU		D	Operation panel
4	JBTN-0186FCZZ	AC		C	Blue key
5	CBTN-0184FC03	AR		C	Panel key B
6	CPWBF1052FCE2	BB	N	E	Operation PWB B
7	XEPSD30P06000	AA		C	Screw (3×6)
8	DHAi-2309FCZZ	AP		C	Operation main harness
9	HiNDP0017QSZZ	AX	N	D	Key sheet B (AB series)
	HiNDP0014QSZZ	AX	N	D	Key sheet B (Inch series)
11	QEARP0075FCZZ	AB		C	Operation earth plate
12	XEPSD30P08000	AA		C	Screw (3×8)

4 Operation panel

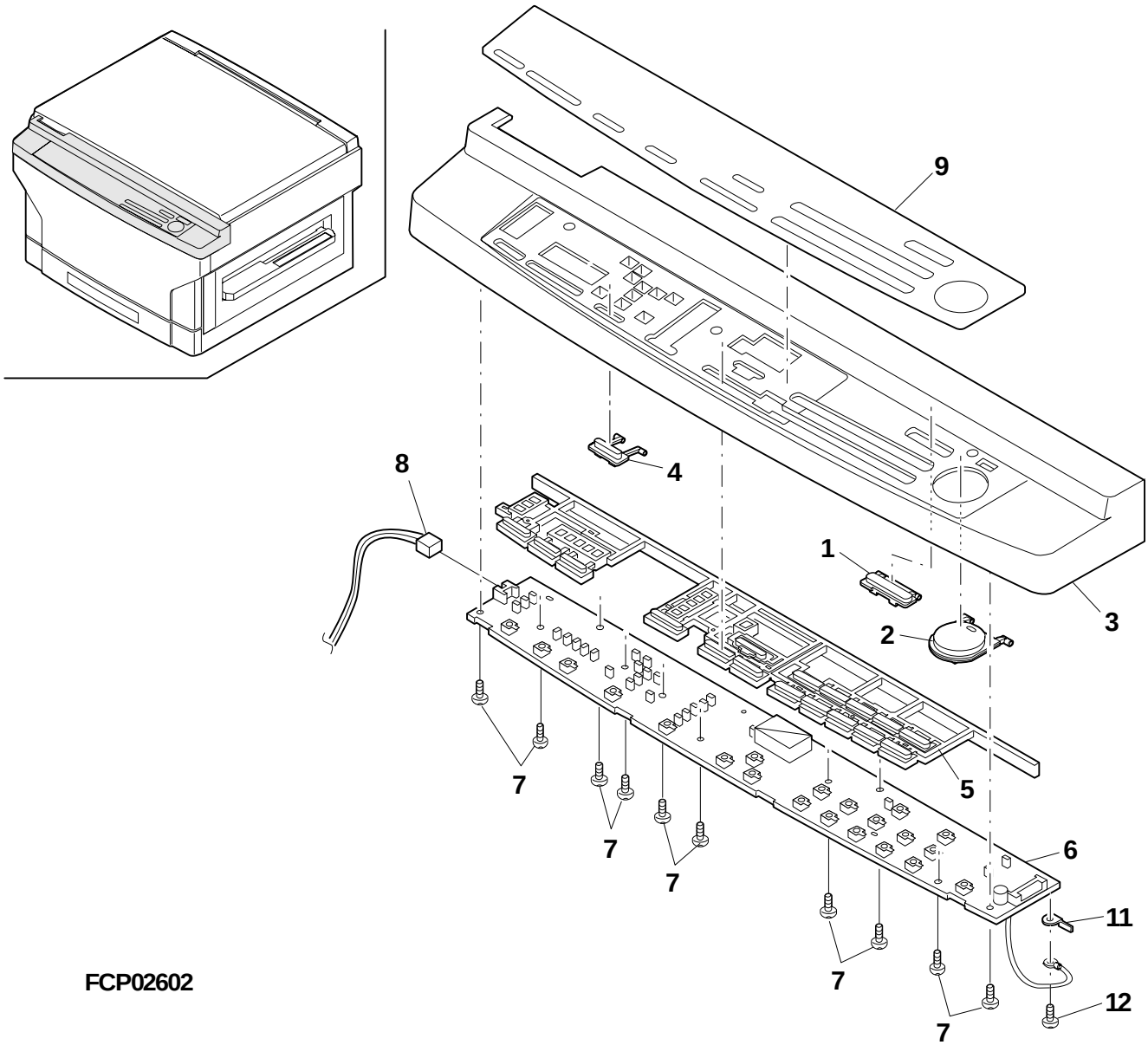

FCP02602

5 Upper frame

NO.	PARTS CODE	PRICE RANK	NEW MARK	PART RANK	DESCRIPTION
1	XEBSE40P10000	AA		C	Screw (4×10)
2	XHBSE40P10000	AA		C	Screw (4×10)
3	LHLDZ1201FCZZ	AE		C	Inter lock switch shaft holder
4	MSPRC2184FCZZ	AA		C	Inter lock switch shaft spring
5	NSFTZ2044FCZZ	AB		C	Inter lock switch shaft
6	LX−WZ0409FCZZ	AB		C	PG washer
7	LFRM−0800FCZZ	AP		C	Upper frame F
8	LDAiU0484FCZZ	AB		C	TC control block
9	LX−BZ0719FCZZ	AA		C	TC Control screw
11	PDUC−0086FCZ1	AP		C	Upper frame fan duct
12	DHAi−0024QSZZ	AZ	N	C	AC interface harness (100V series)
	DHAi−0025QSZZ	AY	N	C	AC interface harness (200V series)
13	CSPRB2177FC31	BA		E	Torsion bar unit
14	XHBSE30P30000	AA		C	Screw (3×30)
15	RMŌTE0006QSZZ	AZ		B	VFM 60
16	QSW−C9170QCZZ	AK		B	Seesaw switch
17	QSW−M0296FCZZ	AM		B	Microswitch
18	LPLTM4542FCZZ	AR		C	Upper frame joint plate
19	VHPGP3A100／−1	AM		B	POD photo sensor (GP3A100)
20	MSPRP0012QSZZ	AF		C	Fusing pressure spring
21	CPWBF1056FCE1	AX	N	E	BL PWB B
22	LX−BZ0728FCZZ	AA		C	Screw (3×8)
23	LHLDZ1198FCZ2	AL		C	BL holder
24	CPWBF1057DS51	BA		E	DL PWB
25	XHBSE30P06000	AA		C	Screw (3×6)
26	LDAiU0483FCZZ	AD		C	DV control block
27	PGiDH0002QSZZ	AR		C	DV lower guide plate
28	PGiDM0001QSZZ	AQ		C	Transport guide upper
29	MSPRC0014QSZZ	AB	N	C	PS roller spring
30	NSFTZ0001QSZZ	AK		C	PS upper roller shaft
31	NBRGP0509FCZZ	AF		C	PS bearing
32	LX−BZ0718FCZZ	AA		C	Screw
33	LBRC−0057FCZZ	AY		C	Manual feeding unit bracket
34	PTME−0235FCZZ	AC		C	Manual feeding unit lock pawl
35	MSPRC2185FCZZ	AA		C	Manual feeding unit lock spring
36	PTME−0236FCZZ	AC		C	Manual feeding unit lock pawl R
37	PTME−0233FCZZ	AD		C	Hook front
38	XBPSD30P10KS0	AB		C	Screw (3×10KS)
39	NSFTZ2045FCZZ	AM		C	Hook shaft
42	MSPRC2182FCZZ	AB		C	Hock spring
43	PTME−0234FCZZ	AD		C	Hock rear
44	CFRM−0801FC08	AX	N	C	Upper frame R
45	NGERH1013FCZZ	AC		C	Gear 30T
46	XRESP70−08000	AA		C	E type ring (7mm)
47	XRESP50−06000	AA		C	E type ring (5mm)
48	NGERH1006FCZZ	AD		C	Gear 33/21T
49	NGERH1005FCZZ	AE		C	Gear 31/23T
50	RPLU−0301FCZZ	AV		B	Separator pawl solenoid
51	CPLTM4755FC01	AF		C	DV drive plate
52	CGERH1014FC01	AG		C	Gear 23T
53	MSPRC2238FCZZ	AA		C	DV 23T spring
54	LPLTP4548FCZZ	AF		C	DV drive plate
55	LX−BZ0736FCZZ	AB		C	Screw
56	LX−BZ0187FCZ1	AA		C	Screw (3×8KS)(Red,Left type)
57	DHAi−2296FCZZ	AS		C	DV interface harness
58	XEBSD30P10000	AA		C	Screw (3×10)
59	DHAi−0010QSZZ	BY		C	Main harness B
60	XBPSD40P10KS0	AA		C	Screw (4×10KS)
62	CPWBF0001QSE1	BP	N	E	Main PWB (120V)
	CPWBF0001QSE2	BP	N	E	Main PWB (Except 120V)
63	MSPRT0925FCZ1	AA		C	PF jum release spring
64	DHAi−2309FCZZ	AP		C	Operation main harness
66	PSHEP3697FCZZ	AG		C	Switch cover sheet
67	LX−WZ0052FCZ1	AA		C	Washer
68	XEBSD30P10000	AA		C	Screw (3×10)
69	LBNDJ0043FCZ1	AA		C	Snap band (SG-130)
70	PSHEP0007QSZ1	AE		C	DV guide lower sheet
72	XHBSE40P08000	AA		C	Screw (4×8)
74	PSHEP3727FCZZ	AA		C	TC block sheet
75	XHBS230P10000	AA		C	Screw (3×10)(Blue)
77	XBBSE30P08000	AA		C	Screw (3×8)
78	PSHEP3757FCZZ	AC		C	BL holder sheet
79	LBNDJ0013FCZ1	AA		C	Wire band
80	PMLT−0959FCZZ	AB		C	DV plate bottom cushion FD
81	PMLT−0960FCZZ	AB		C	DV plate bottom cushion RD
82	PMLT−0961FCZZ	AA		C	Base plate cushion R
83	PSEL−0641FCZ2	AE		C	DV plate REND seal
84	PSHEP3778FCZ1	AB		C	REND sheet
89	XEBSD30P08000	AA		C	Screw (3×8)
91	PSHEP3808FCZZ	AD		C	Shield sheet A

5 Upper frame

NO.	PARTS CODE	PRICE RANK	NEW MARK	PART RANK	DESCRIPTION
93	P S H E Z 4 0 7 7 F C Z Z	AC		C	Sheet
94	M S P R T 0 0 0 1 Q S Z Z	AC		C	PS roller spring
95	N R Ö L P 0 0 0 1 Q S Z Z	AD		C	PS roller upper
96	X R E S P 4 0 − 0 6 0 0 0	AA		C	E type ring

5 Upper frame

NO.	PARTS CODE	PRICE RANK	NEW MARK	PART RANK	DESCRIPTION
97	X B P S D 3 0 P 0 8 K S 0	AA		C	Screw (3×8KS)
100	P S H E P 0 0 0 8 Q S Z Z	AE		C	BL sheet
101	P C U S F 0 0 0 3 Q S Z Z	AB	N	C	Separator pawl solenoid cushion 2

5 Upper frame

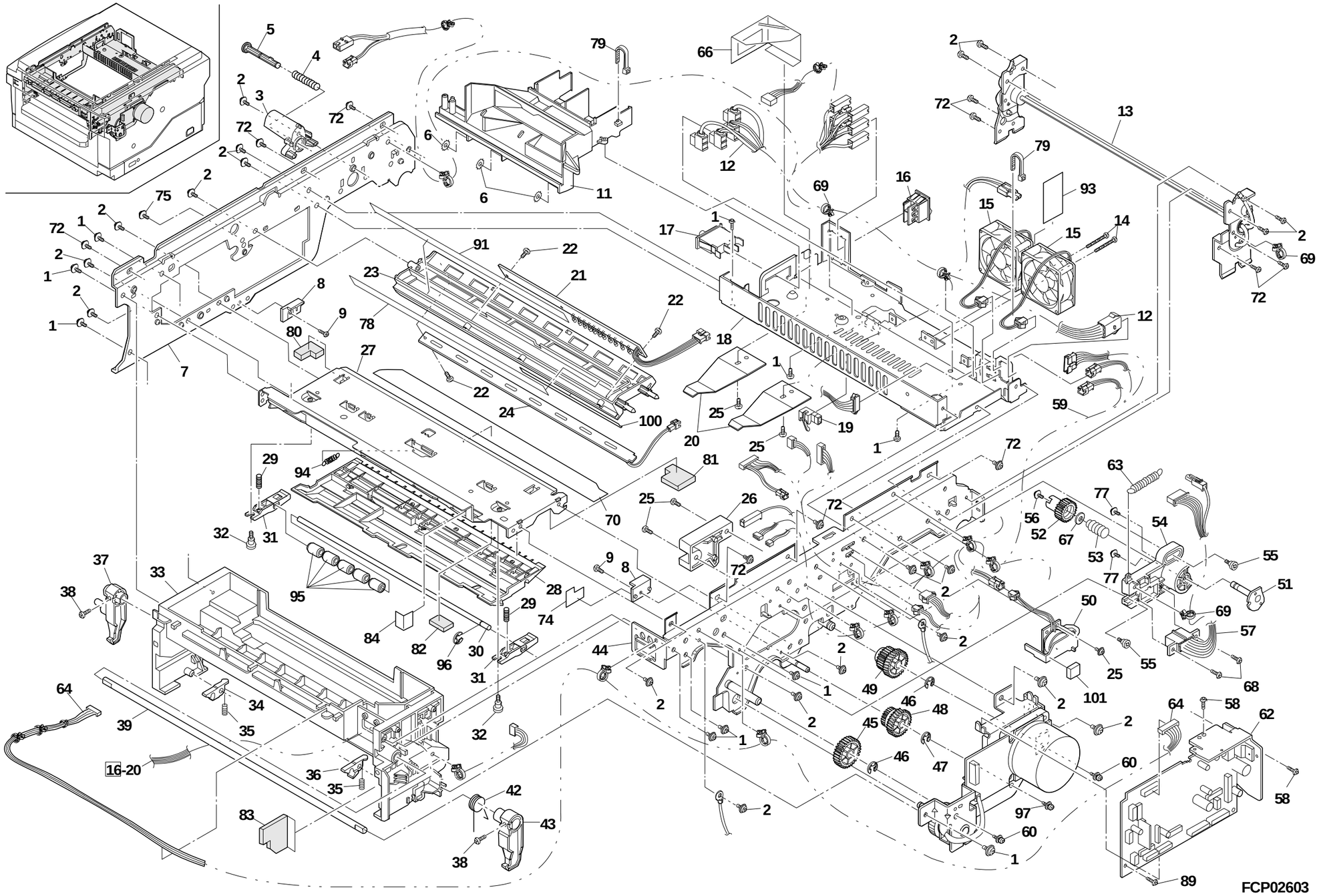

6 Optical unit

NO.	PARTS CODE	PRICE RANK	NEW MARK	PART RANK	DESCRIPTION
1	CCŌVP1229DS01	AX		C	Dark box cover
2	PGiDM0005QSZZ	AG		C	OC hinge guide left
3	RMŌTE0002QSZZ	AY		B	Fan motor (MOT80L50)
4	PDUC−0002QSZZ	AK		D	CFM duct L
5	PSHEZ3587FCZZ	AG		C	Insulator sheet
6	PGiDM0004QSZZ	AG		C	OC hinge guide right
7	LHLDZ1182FCZZ	AE		C	AE holder
8	CPWBF1058DS31	AS		E	AE PWB
9	XEPSD30P06000	AA		C	Screw (3×6)
10	XBBSD40P10000	AA		C	Screw (4×10)
11	VHPGP3A38／／−1	AH		B	Photo transistor (GP3A38)
12	LFiX−0284FCZZ	AC		C	4th 5th mirror fixing plate F
13	XBPSD30P04K00	AA		C	Screw (3×4K)
14	NSFTZ2074FCZZ	AD		C	Lens drive pulley shaft
15	NPLYZ0291FCZZ	AG		C	Lens drive pulley
16	MCAMP0092FCZZ	AD		C	4/5 magnification ratio changing cam
17	LX−BZ0586FCZZ	AA		C	Screw
18	XBPSD30P06KS0	AA		C	Screw (3×6KS)
19	VHPGP1A22LC−1	AK		B	Photo sensor (GP1A22LC)
20	LX−BZ0353FCZZ	AA		C	Screw (4×6)(Black)
21	PGiDM1494FCZZ	AE		C	Lens guide
22	PRNGP0025FCZZ	AA		C	G ring (GTW-5)
23	NPLYZ0340FCZZ	AC		C	L pulley
24	LX−BZ0733FCZZ	AB		C	Screw
25	XBBSD40P06000	AA		C	Screw (4×6)
26	XBPSD40P06K00	AA		C	Screw (4×6K)
27	CPLTM4599FC01	AE		C	Pulley fixing plate
28	NPLYZ0292FCZZ	AH		C	Pulley
29	NPLYZ0340FCZZ	AC		C	L pulley
30	PRNGP0025FCZZ	AA		C	G ring (GTW-5)
34	PSHEZ3590FCZZ	AA		C	6th reflect prevention sheet R
35	LRALM0116FCZZ	AE		C	MB-B rail
36	LX−BZ0335FCZZ	AA		C	Screw (4×6)(Red)
37	PMLT−0938FCZZ	AD		C	Duct cushion
40	PMiR−0116FCZZ	AQ		B	6th mirror
41	LX−BZ0637FCZZ	AC		C	Screw (Red)
42	PSHEZ3709FCZZ	AB		C	Optical shield sheet
43	DHAi−0023QSZZ	AK	N	C	Optical base plate harness
44	XRESP70−08000	AA		C	E type ring (7mm)
45	NPLYZ0305FCZZ	AP		C	Winding pulley KY
46	LX−BZ0324FCZZ	AA		C	Screw (3×4)
47	LX−BZ0049FCZZ	AB		C	Screw (4×6)
48	NGERH0998FCZZ	AE		C	Winding drive shaft gear
49	NSFTZ2056FCZ2	AP		C	Winding drive shaft
50	NBRGC0133FCZ1	AC		C	PF bearing (ϕ8)
51	CDAiU0486FC02	BF		C	Optical base
52	LX−WZ0050FCZ1	AA		C	Washer (ϕ4)
53	XWHSD40−08000	AA		C	Washer
54	XNESF40−32000	AA		C	Nut (ϕ4)
55	RMŌTP0005QSZZ	AX		B	Lens motor
56	LPLTM4562FCZZ	AA		C	Lens drive shaft fixing plate
57	LPLTM4563FCZZ	AE		C	Mirror motor fixing plate
58	RMŌTP0001QSZZ	AY		B	Mirror motor
59	NBRGC0387FCZ1	AC		B	Bearing
60	XRESP50−06000	AA		C	E type ring (5mm)
68	PSHEZ3589FCZZ	AA		C	6th reflect prevention sheet F
70	LPLTM4747FCZZ	AE		C	Glass fixing plate
80	LBNDJ0043FCZ1	AA		C	Snap band
81	PWiR−0168FCZZ	AQ		C	MB wire
82	NSFTZ2057FCZZ	AE		C	4th,5th drive shaft
83	MSPRC2265FCZZ	AB		C	MB spring
84	CHLDZ1187DS32	BE		E	4th 5th mirror holder unit B
⚠ 85	CREFL0001QS31	BN		E	light source unit (100V series)
⚠ 85	CREFL0001QS32	BP		E	Light source unit (200V series)
86	LHLDZ1239FCZZ	AE		C	Wire holder
87	CHLDZ1184DS31	BF		E	2nd 3rd mirror holder unit
88	MSPRT2272FCZZ	AB		C	Lens drive spring
89	PWiR−0167FCZZ	AP		C	Lens drive wire
90	NSFTZ2055FCZ1	AK		C	Lens drive shaft A
92	PSHEP3594FCZ1	AD		C	Lens left sheet
93	CLNS−0056FC32	BE		E	Lens unit A
94	PSHEP3595FCZ1	AD		C	Lens right sheet
95	LSTPP0279FCZZ	AB		C	Stopper
96	NSFTZ2057FCZZ	AE		C	4th,5th drive shaft
97	LHLDZ1189FCZZ	AX		C	Lens carriage A
98	PSHEP3715FCZZ	AD		C	Lens upper sheet
99	PSHEZ3714FCZZ	AE		C	Lens shield sheet
101	LHLDW1224FCZZ	AA		C	Wire holder (WS1NS)
103	XEPSD40P35000	AA		C	Screw (4×35)
105	XEBSE40P08000	AA		C	Screw (4×8)

6 Optical unit

NO.	PARTS CODE	PRICE RANK	NEW MARK	PART RANK	DESCRIPTION
106	XBPBZ40P06K00	AA		C	Screw (4×6K)
111	CPLTM4770DS01	AN		C	Optical base reinforce plate
112	LPLTM4749FCZZ	AF		C	Optical joint plate AB
113	PSHEZ3786FCZZ	AA		C	Dark box fixing sheet A
115	PCUSS0321FCZZ	AB		C	2nd
116	PSHEP3807FCZZ	AB		C	Cabinet hook sheet
117	PGUMS0255FCZZ	AA		C	Table glass rubber
119	PSHEP3711FCZZ	AB		C	Tip sheet
120	XBPSD30P06K00	AA		C	Screw (3×6K)
122	QEARP0066FCZZ	AC		C	Table glass earth plate
123	LX−BZ0719FCZZ	AA		C	TC Control screw
124	LPiNS1021HCZZ	AA		C	Stopper pin (ϕ3-10)
125	LX−WZ0017FCZZ	AA		C	Washer (ϕ8)
126	LHLDW1240FCZZ	AC		C	Wire holder (KKD4)
127	PCLi−0007FCZZ	AB		C	Lens stopper SP
131	PSHEP3828FCZZ	AB		C	AE harness cover
133	PSHEP3861FCZZ	AF		C	Dark box insuiator sheet
140	PRNGP0081FCZZ	AA		C	Ring (E4)
143	PSHEP4083FCZZ	AC		C	Optical sheet

6 Optical unit

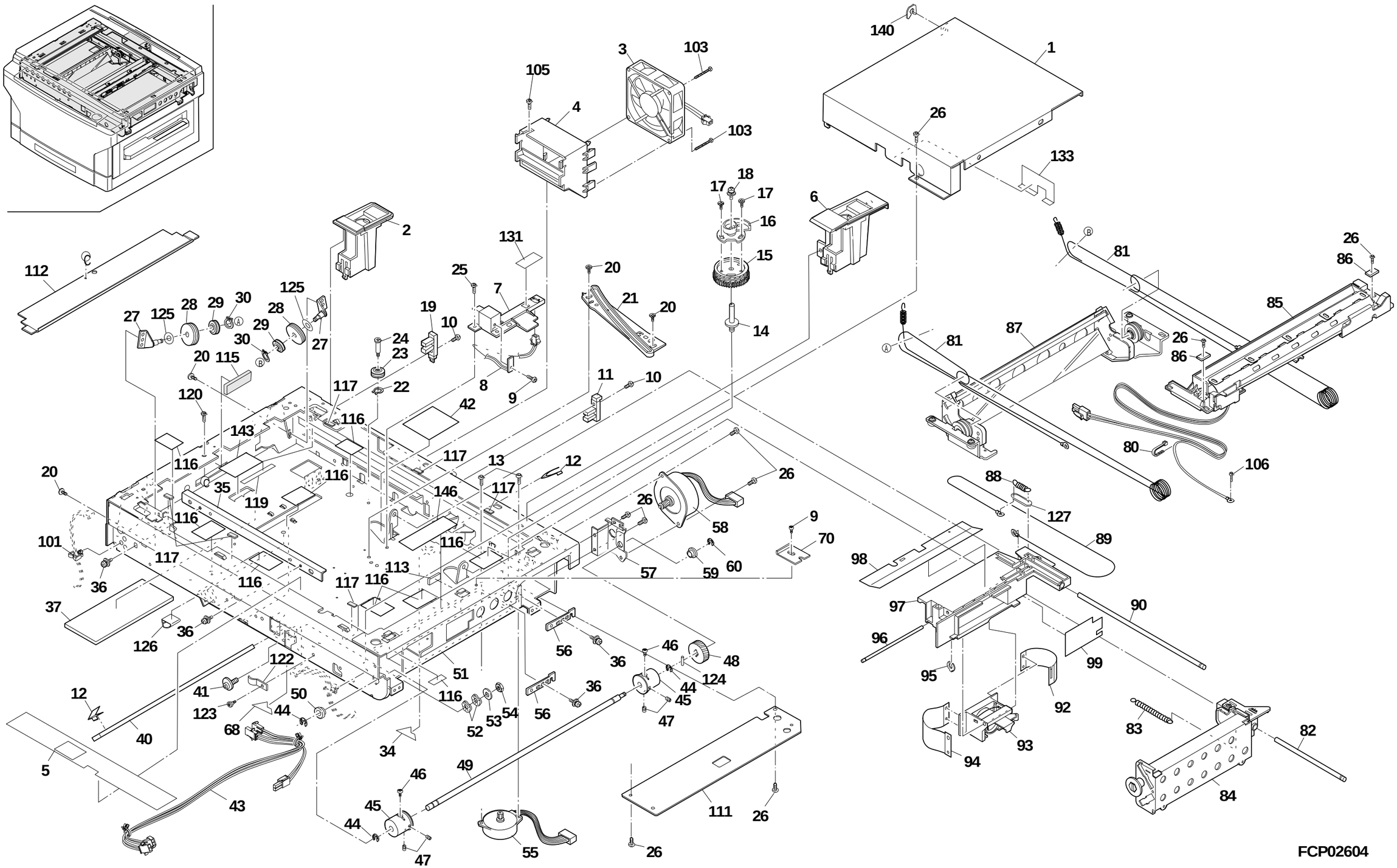

7 Mirror holder unit

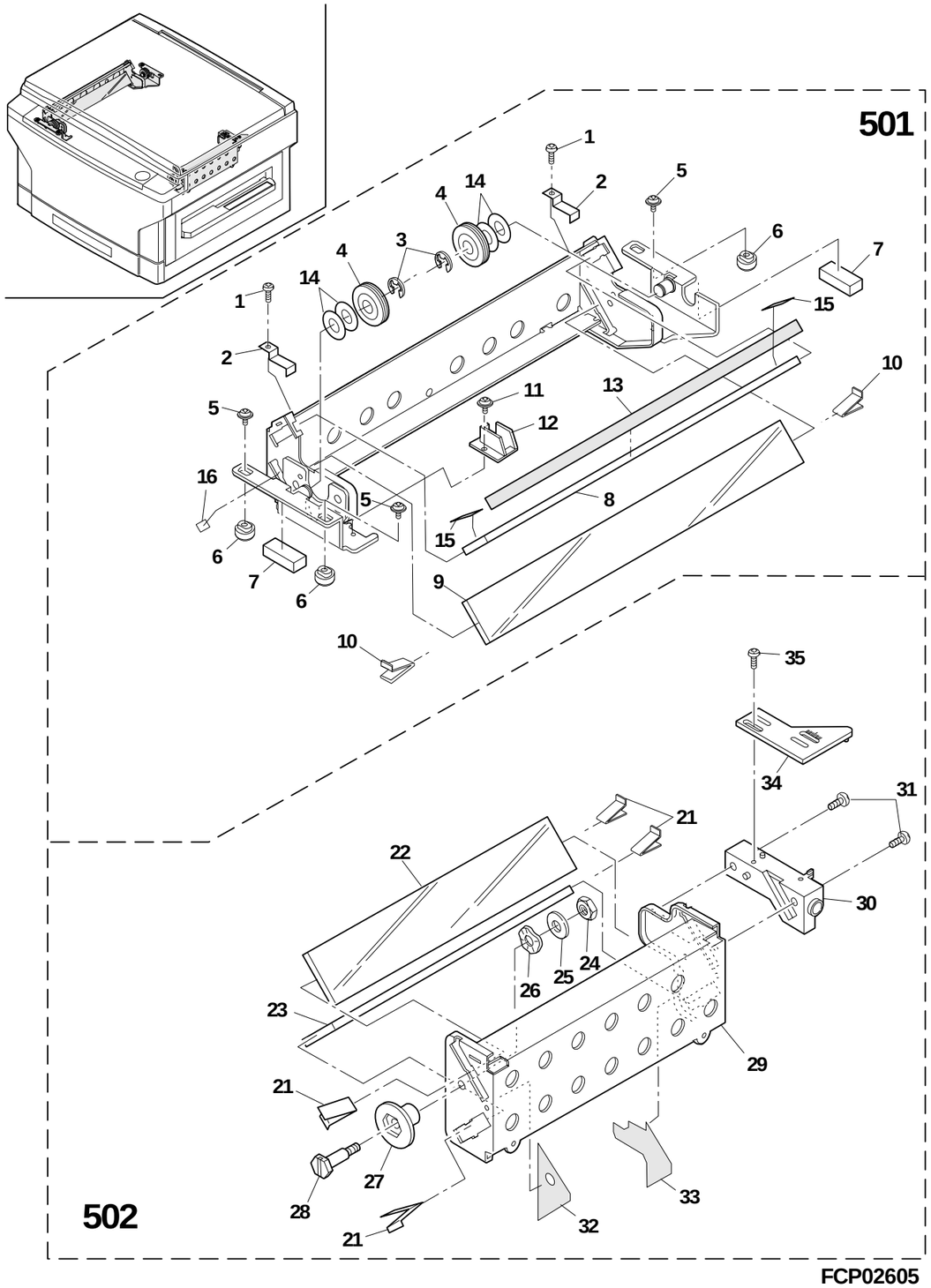

7 Mirror holder unit

NO.	PARTS CODE	PRICE RANK	NEW MARK	PART RANK	DESCRIPTION
1	XBPSD30P04K00	AA		C	Screw (3×4K)
2	LFiX-0467FCZZ	AC		C	2nd mirror fixing plate
3	LX-WZ0077FCZZ	AA		C	G type ring (G8)
4	NPLYZ0276FCZZ	AG		C	W pulley
5	LX-BZ0707FCZZ	AA		C	Screw
6	CSLi-0057FC32	AF		E	Slider unit (4pcs/set)
7	PCUSS0201FCZZ	AA		C	MB-B cushion
8	PMiR-0118FCZZ	AR		B	2nd mirror
9	PMiR-0119FCZZ	AV		B	3rd mirror
10	LFiX-0284FCZZ	AC		C	4th 5th mirror fixing plate F
11	XHBSD30P06000	AA		C	Screw (3×6)
12	PGiDM1539FCZZ	AC		C	CL guide
13	PSHEP3713FCZZ	AB		C	2nd mirror sheet
14	LX-WZ0416FCZZ	AD		C	Washer (ϕ8-13)
15	PSHEP3814FCZZ	AB		C	2nd mirror spacer sheet
16	PSHEZ4049FCZZ	AC		C	3rd mirror spacer
21	LFiX-0284FCZZ	AC		C	4th 5th mirror fixing plate F
22	PMiR-0120FCZZ	AT		B	4th mirror
23	PMiR-0121FCZZ	AQ		B	5th mirror
24	XNESD40-32000	AA		C	Nut (ϕ4)
25	XWHSD40-08000	AA		C	Washer
26	LX-WZ0050FCZ1	AA		C	Washer (ϕ4)
27	PCLR-0392FCZZ	AB		C	Collar
28	LX-BZ0725FCZZ	AB		C	Screw
29	LHLDZ1187FCZZ	AK		C	4th 5th mirror holder
30	LHLDZ1188FCZZ	AF		C	4th 5th drive holder
31	XBPSD40P06000	AA		C	Screw (4×6)
32	PSHEZ3591FCZZ	AA		C	4th 5th shield sheet F
33	PSHEZ3592FCZZ	AB		C	4th 5th shield sheet R
34	LPLTP4569FCZZ	AE		C	4/5 magnification ratio changing hold plate
35	XBPSD40P06000	AA		C	Screw (4×6)
501	CHLDZ1184DS31	BF		E	2nd 3rd mirror holder unit
502	CHLDZ1187DS32	BE		E	4th 5th mirror holder unit B

8 Light source unit

NO.	PARTS CODE	PRICE RANK	NEW MARK	PART RANK	DESCRIPTION
1	LPLTM0006QSZZ	AE		C	Control plate
2	RLMPU0002QSZZ	BE		B	Copy lamp (100V series)
	RLMPU0003QSZZ	BF		B	Copy lamp (200V series)
3	PREFL0001QSZZ	AZ		C	Main reflector
4	PMiR-0001QSZZ	AY		B	1st mirror
5	LPLTP0005QSZZ	AG		C	Side plate R
6	PREFL0002QSZZ	AK		C	Side reflector
7	XJPSD30P05000	AA		C	Screw (3×5)
8	CSLi-0057FC32	AF		E	Slider unit (4pcs/set)
9	MSPRP0008QSZZ	AH		C	Lamp spring R
10	LPLTM4714FCZZ	AE		C	Terminal plate
11	CFS-T098FC32	AN		A	Temparature fuse
12	PCÖVP0004QSZZ	AE		C	Cover R
13	MSPRP2101FCZZ	AC		C	Mirror spring
14	LPLTM4716FCZ1	AF		C	Wire fixing plate R
17	LPLTM4715FCZ1	AF		C	Wire fixing plate F
18	LPLTP0004QSZZ	AG		C	Side plate F
19	MSPRP0007QSZZ	AF		C	Lamp spring F
20	PCÖVP0003QSZZ	AE		C	Cover F
21	PCUSU0203FCZZ	AE		C	Cushion
22	DHAi-0002QSZZ	AZ		C	CL harness
23	LBNDJ0037FCZ1	AA		C	Wire band (T18S)
24	PSHEZ3686FCZZ	AH		C	Insulator sheet
25	LDAiU0001QSZZ	AT		C	Base
26	PREFL0153FCZZ	AK		C	Sub reflector
27	XHPSD30P06000	AA		C	Screw (3×6)
28	XHBSD30P08000	AA		C	Screw (3×8)
29	XBPBN30P05000	AB		C	Screw (3×5)
30	XEBSD30P06000	AA		C	Screw (3×6)
31	XHBSD30P06000	AA		C	Screw (3×6)
	(Unit)				
901	CREFL0001QS31	BN		E	Light source unit (100V series)
	CREFL0001QS32	BP		E	Light source unit (200V series)

10 Toner hopper unit

NO.	PARTS CODE	PRICE RANK	NEW MARK	PART RANK	DESCRIPTION
9	PSHT−0064FCZ2	AF		C	Shutter
10	NSFTZ2065FCZZ	AD		C	Rotation fulcrum shaft
11	NGERH1002FCZZ	AE		C	32T gear
12	LX−BZ0727FCZZ	AC		C	Screw (M3)
13	NGERH0240FCZZ	AB		C	Gear 16T (A2-16-1)
14	PBŌX−0001QSZZ	AK		D	Toner hopper
15	NGERH0143FCZZ	AC		C	Cleaner drive gear 14T
16	NBRGC0523FCZ1	AE		C	Bearing
17	NSRW−0022FCZZ	AE		C	Screw
18	NBRGP0299FCZZ	AC		C	DV bearing (ϕ5)
19	XEBSD30P08000	AA		C	Screw (3×8)
20	RMŌTD0003QSZZ	AX		B	Toner motor
21	NGERH0004QSZZ	AE		C	Toner motor gear
22	NSFTZ2043FCZZ	AD		C	Toner shaft
23	NGERH1003FCZZ	AD		C	11T gear
24	NGERH1004FCZZ	AC		C	Toner gear 16T
25	PRNGP0025FCZZ	AA		C	V ring (GTW-5)
26	PSEL−0596FCZZ	AA		C	Toner hopper seal C
27	TLABZ3582FCZZ	AB		C	Green 91 label
28	LX−WZ0405FCZZ	AB		C	Sheet ring 3.5
29	LX−BZ0734FCZ1	AC		C	Screw
30	XEPSD30P12000	AA		C	Screw (3×12)
31	DHAi−2329FCZZ	AD		C	Earth wire
32	NGERH1003FCZ1	AD		C	11T gear
33	LX−BZ0747FCZZ	AB		C	Screw (M4)
34	LSTPF0310FCZZ	AC		C	Pressure stopper
35	LX−BZ0754FCZZ	AB		C	Screw
36	LX−WZ0186FCZZ	AA		C	Washer (ϕ6)
37	XWHSD50−05120	AA		C	Washer
38	XNESD20−16000	AA		C	Nut (2mm)
39	XBPSD20P12000	AA		C	Screw (2×12)
41	LPLTP5123FCZZ	AK		C	TH plate A
42	LPLTM5037FCZZ	AD		C	Plate
	(Unit)				
901	CBŌX−0001RS54	AW	N	E	Toner hopper unit

11 Fusing unit

NO.	PARTS CODE	PRICE RANK	NEW MARK	PART RANK	DESCRIPTION
1	XHBSD30P06000	AA		C	Screw (3×6)
2	TCAUH0931FCZZ	AB		C	High temparature caution label
3	PCŌVQ1231FCZ2	AW		C	Fusing cover
4	MSPRT1324FCZ1	AA		C	Delivery roller spring rear
5	PCLR−0400FCZZ	AC		C	Delivery collar
6	PTME−0168FCZZ	AF		C	Upper separator pawl
7	MSPRT2209FCZZ	AA		C	Separator pawl spring
9	LHLDZ1191FCZZ	AC		C	Lamp holder
10	XWHSD30−05080	AA		C	Washer (3W)
11	XHBSD30P10000	AA		C	Screw (3×10)
12	RDTCT0002QSZZ	AR		B	Thermistor
13	LFRM−0808FCZZ	AP		C	Fusing upper frame
14	XEBSD30P08000	AA		C	Screw (3×8)
15	PGiDH1498FCZZ	AF		C	Fusing front upper guide
16	MSPRT2210FCZZ	AA		C	Fusing front paper guide spring
17	LDAiU0488FCZZ	AB		C	Paper guide block R
18	PGiDH1497FCZZ	AF		C	Fusing front paper guide
19	LDAiU0487FCZZ	AB		C	Paper guide block F
20	LSTPF0172FCZ1	AA		C	Roller stopper
21	NGERH0443FCZ1	AD		C	Gear 48T
22	LX−BZ0342FCZZ	AB		C	Screw
23	CBRGP0528FC02	AN		B	Fusing bearing R
24	NRŌLT1031FCZZ	BC		C	Upper heat roller
⚠ 25	RLMPU0532FCZZ	BC		B	Heater lamp (120V)
⚠ 25	RLMPU0534FCZZ	BC		B	Heater lamp (220V)
26	XHBSD30P04000	AA		C	Screw (3×4)
27	RTHM−0009FCZZ	AK		B	Thermostat
30	MSPRP2263FCZZ	AB		C	Delivery paper guide plate spring
32	LBSHC0310FCZZ	AA		C	Fusing edge bush
33	CBRGP0525FC02	AN		B	Fusing bearing F
34	PTUBG0100FCZZ	AC		C	HL harness protect tube (200V series)
35	PBRSS0145FCZZ	AF		B	Discharge brush 4
36	PBRSS0143FCZZ	AE		B	Discharge brush 2
37	PBRSS0144FCZZ	AE		B	Discharge brush 3 (27)
38	PBRSS0142FCZZ	AE		B	Discharge brush 1 (12.5)
39	PSHEP3788FCZZ	AD		C	PG sub sheet
	(Unit)				
901	CFRM−0808FC5D	BT		E	Fusing unit (120V)
901	CFRM−0808FC5F	BT		E	Fusing unit (220V)

11 Fusing unit

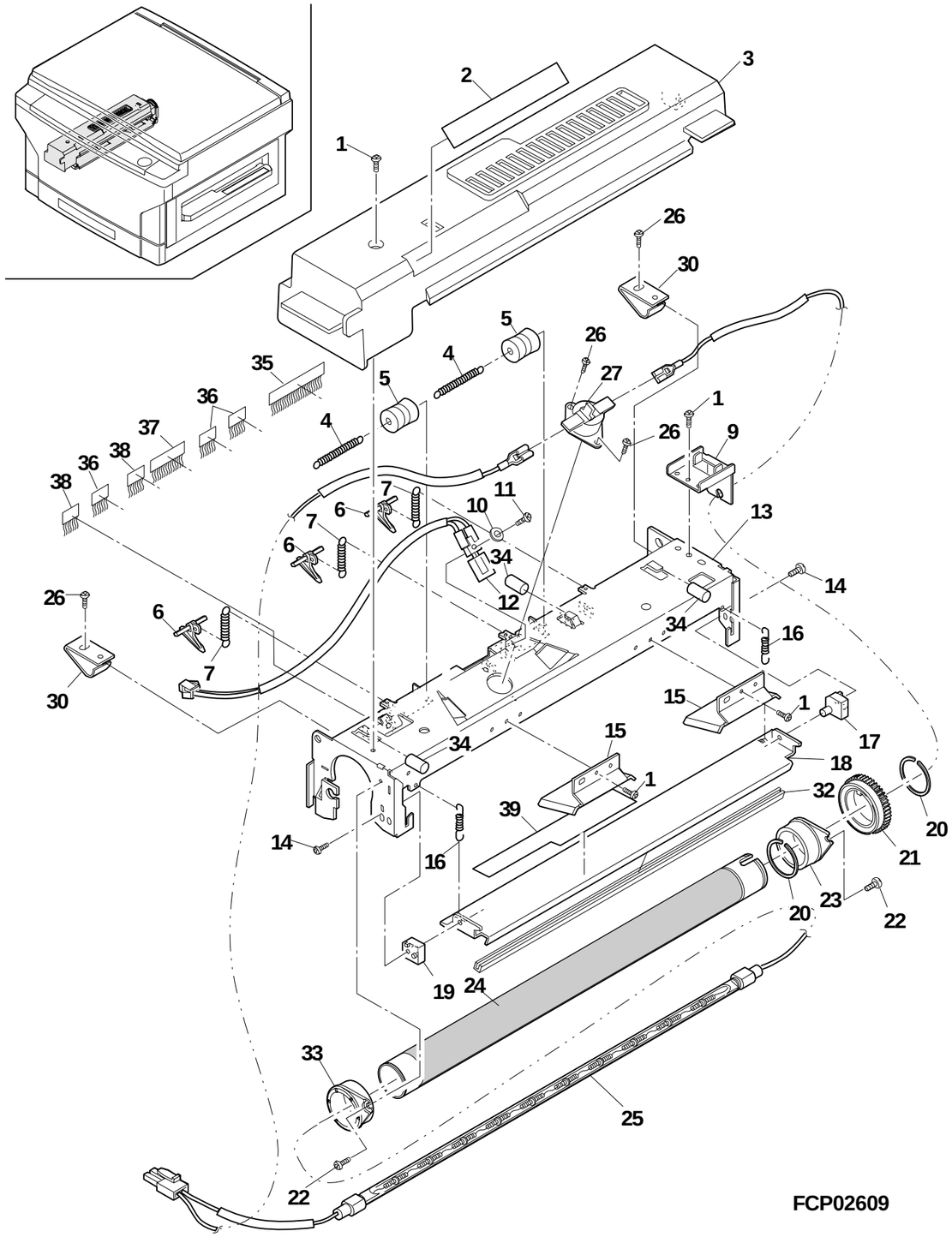

12 Main drive unit

NO.	PARTS CODE	PRICE RANK	NEW MARK	PART RANK	DESCRIPTION
1	NGERH1009FCZZ	AD		C	Gear 35/20T
2	NGERH1008FCZZ	AD		C	Gear 59/24T
3	NGERH1007FCZZ	AD		C	Gear 68/21T
4	XRESP70−08000	AA		C	E type ring (7mm)
5	NGERH1010FCZZ	AD		C	Gear 76/23T
6	NGERH1013FCZZ	AC		C	Gear 30T
7	NBRGC0553FCZZ	AD		C	Bearing
8	PRNGP0022FCZZ	AA		C	C ring (G-8)
9	NGERH1011FCZZ	AD		C	Gear 28/22T
10	LPiNS0263FCZ1	AA		C	T type pin
11	PCLC−0230FCZ1	AZ		B	Transport clutch
12	CPLTM4547FC01	AP		C	Main drive fixig plate A
13	RMŌTP0004QSZZ	BY		B	Main motor
14	XBPSD40P14K00	AA		C	Screw (4×14K)

12 Main drive unit

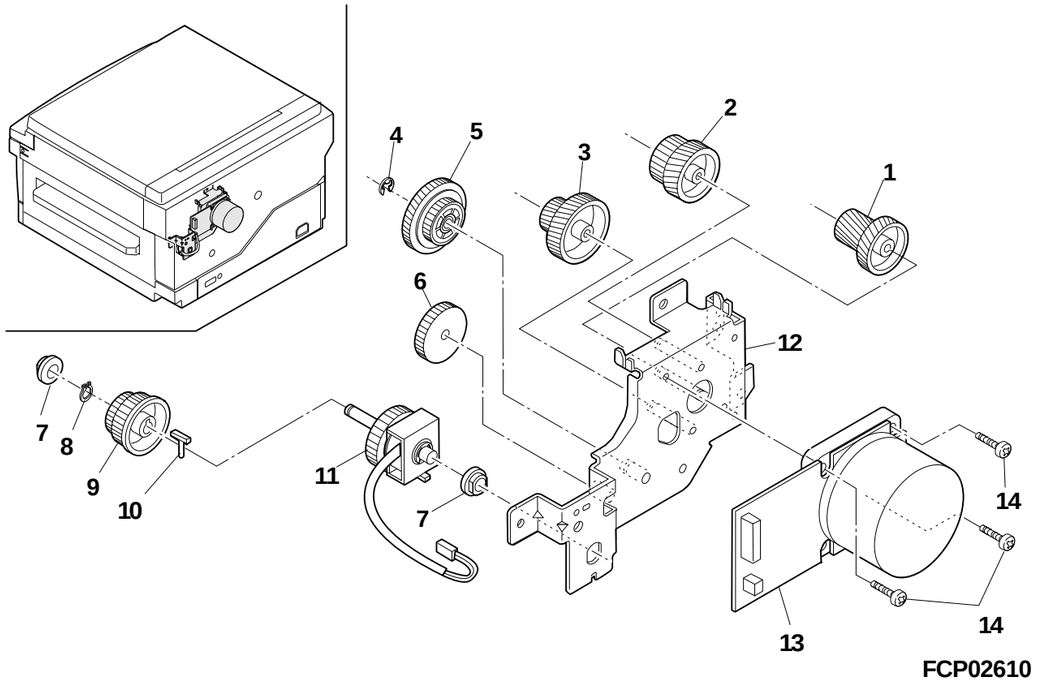

13 Lower frame

NO.	PARTS CODE	PRICE RANK	NEW MARK	PART RANK	DESCRIPTION
1	XHBSE40P10000	AA		C	Screw (4×10)
2	LX−BZ0358FCZ2	AC		C	Screw
3	XEBSE40P12000	AA		C	Screw (4×12)
6	MSPRC2264FCZZ	AC		C	CL roller spring
7	MSPRC2294FCZZ	AA		C	Pressure spring N
8	MLEVF0001QSZ1	AG		C	Pressure lever FL
9	XRESP50−06000	AA		C	E type ring (5mm)
10	NBRGP0260FCZ1	AD		B	Pressure bearing N
11	NRŌLi1028FCZZ	AZ		C	Pressure roller
14	XHBSE40P06000	AA		C	Screw (4×6)
15	MLEVF0002QSZ1	AG		C	Pressure lever RL
17	CRŌLN1026FC33	AX		E	Lower CL roller unit
18	NSFTZ2078FCZZ	AF		C	Lower CL roller shaft
19	NRŌLR1027FCZ1	AN		C	Delivery roller
20	NBRGC0188FCZZ	AB		B	PF bearing
21	PGiDH1488FCZZ	AG		C	Delivery paper guide
22	LPiNS0133FCZZ	AA		C	Pin (ϕ2-10)
23	NGERH0866FCZZ	AC		C	Gear (22T)

13 Lower frame

NO.	PARTS CODE	PRICE RANK	NEW MARK	PART RANK	DESCRIPTION
24	LPLTM4746FCZZ	AD		C	Scraper
25	NBRGC0504FCZZ	AC		C	Bearing (F8×12×15 16X)
26	LX−WZ0042FCZ1	AA		C	Washer
27	PCLC−0235FCZ1	AX		B	PS clutch
28	NGERH1015FCZZ	AD		C	PS joint gear 25T
29	MARMP0184FCZZ	AD		C	PS joint arm
30	XRESP40−05000	AA		C	E type ring (4mm)
31	MSPRP1213FCZ1	AA		C	Transfer guide spring
32	NRŌLR0003QSZZ	AW		C	PS roller lower
33	NBRGP0510FCZZ	AC		C	Roller bearing
34	NPLYZ0254FCZZ	AD		C	Drive pulley (MXL24T)
35	LPiNS0155FCZZ	AA		C	Pin (ϕ3-10)
36	MSPRC2230FCZZ	AA		C	TC pressure spring
37	PSHEP3580FCZZ	AD		C	PS roller lower sheet
38	CRŌLR1052FC33	AX		E	Reversing roller unit
39	MARMP0183FCZZ	AE		C	Separator roller release arm
40	MSPRC2189FCZ1	AC		C	Separator roller pressure spring
41	PCUSS0302FCZZ	AA		C	Release arm cushion
42	NBLTH0234FCZ1	AL		B	Belt (159MXL 6.4)
43	CFRM−0805FC55	BN		E	250 Cassette paper feeding unit
44	LPLTM4549FCZZ	AT		C	Base plate reinforce plate
45	GDAi−0164FCZ1	BG		D	Lower frame base plate
46	XEPSD30P20000	AA		C	Screw (3×20)
48	CHLDZ1202FC52	BN		E	Socket holder unit
49	LHLDZ1203FCZZ	AL		C	Power supply PWB holder
⚠ 50	CPWBF1053FCE2	AW	N	E	AC circuit PWB (100V series)
⚠ 50	CPWBF1053FCE7	AW	N	E	AC circuit PWB (200V series)
51	XBPBZ40P06K00	AA		C	Screw (4×6K)
52	DHAi−0015QSZZ	BC		C	AC harness
⚠ 54	RTRNP0003QSZZ	BD		B	Power transformer (120V)
⚠ 54	RTRNP0005QSZZ	BD		B	Power transformer (220V/230V)
55	CPWBF1055FCE1	AZ	N	E	Lower unit PWB
56	LSUPP0080FCZZ	AA		C	Supporter (MPS-12-0)
57	LSUPP0061FCZZ	AB		C	PWB supporter (SPLS-7)
58	NGERH0394FCZZ	AB		C	Gear 24T
59	XBPSD40P10K00	AA		C	Screw (4×10K)
60	CGERH0113FC01	AG		C	DV drive gear
61	CARMM0189FC01	AE		C	Fusing joint arm
62	NGERH1027FCZZ	AC		C	Gear 22T
⚠ 63	DHAi−2378DS11	AX		B	AC cord (Blazil,LAG2)
⚠ 63	QACCV6621QCN1	AU		B	AC cord (LAG4)
64	XBPSE30P06000	AA		C	Screw (3×6)
67	XNESD50−40000	AA		C	Nut
68	MSPRC2267FCZZ	AA		C	Earth spring 250
69	MSPRC2266FCZZ	AB		C	Paper feeding earth spring
70	XRESP70−08000	AA		C	E type ring (7mm)
71	XBPSD40P25XS0	AA		C	Screw (4×25XS)(100V series)
72	XBPSD40P08KS0	AA		C	Screw (4×8KS)(100V series)
73	LFiX−0084FCZZ	AC		C	AC cord holder (100V series)
75	PSHEP3724FCZZ	AB		C	BU sheet 1
76	PSHEP3725FCZZ	AB		C	BU sheet 2
77	PSHEZ3716FCZZ	AK		C	Fusing lower pressure sheet
78	PSHEP3665FCZZ	AB		C	Lower unit PWB protect sheet
79	LX−WZ0414FCZZ	AA		C	Washer
80	XHBSD40P12000	AA		C	Screw (4×12)
88	GLEGG0058FCZZ	AC		C	Rubber foot
90	NBRGP0512FCZZ	AC		C	Suction bearing B
91	NRŌLP1024FCZZ	AF		C	Suction roller A
92	NRŌLP1025FCZZ	AF		C	Suction roller B
93	NBLTH0236FCZZ	AK		B	Suction belt
94	NBRGP0511FCZZ	AB		C	Suction bearing A
98	PSHEZ3783FCZZ	AD		C	Sheet
99	LBNDJ0037FCZ1	AA		C	Wire band (T18S)
100	LSTPP0279FCZZ	AB		C	Stopper,Fusing unit
103	PSHEP0010QSZZ	AE		C	AC PWB sheet
104	MSPRP1213FCZZ	AA		C	Transfer guide spring
105	CFRM−0802FC01	AR		C	Lower frame F
106	CFRM−0803FC01	AV		C	Lower frame R 250A

13 Lower frame

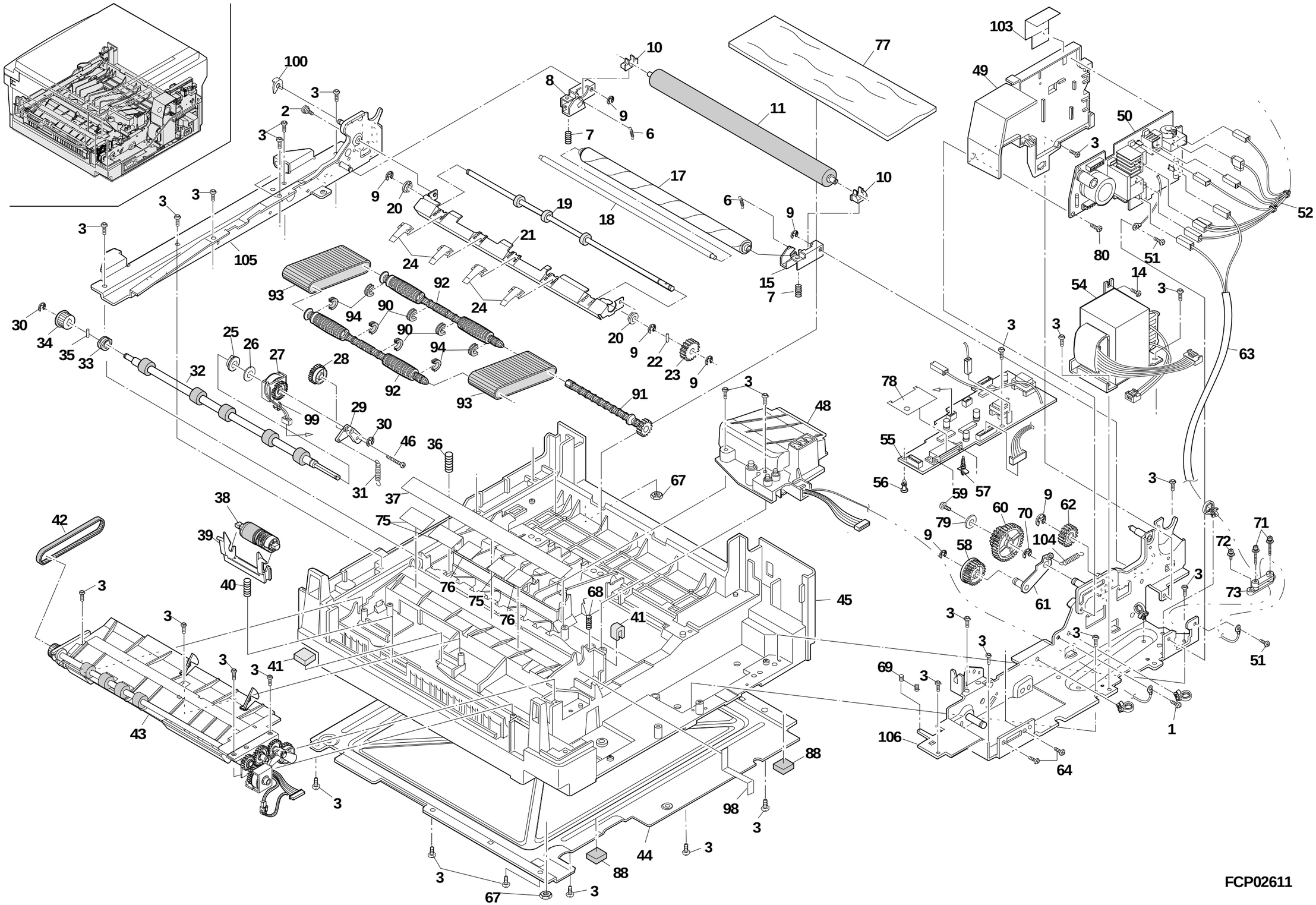

14 High voltage unit

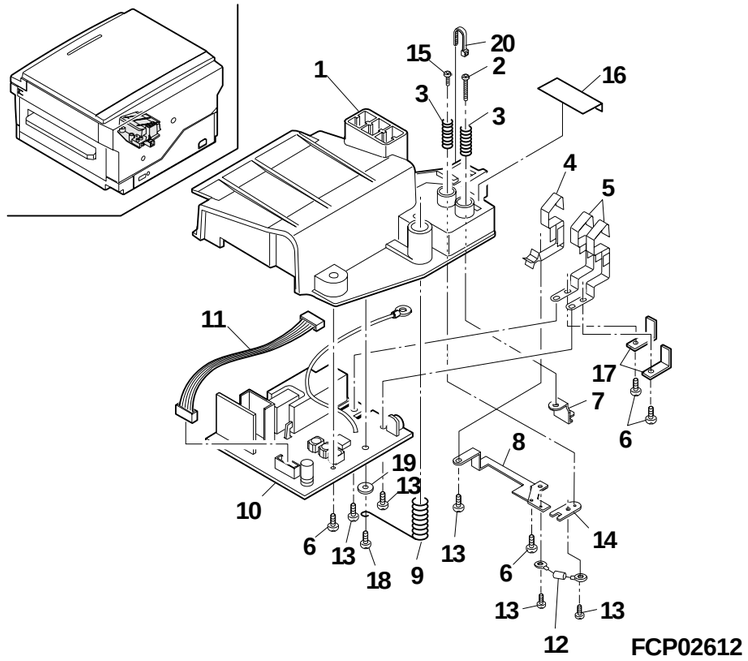

15 TC case unit

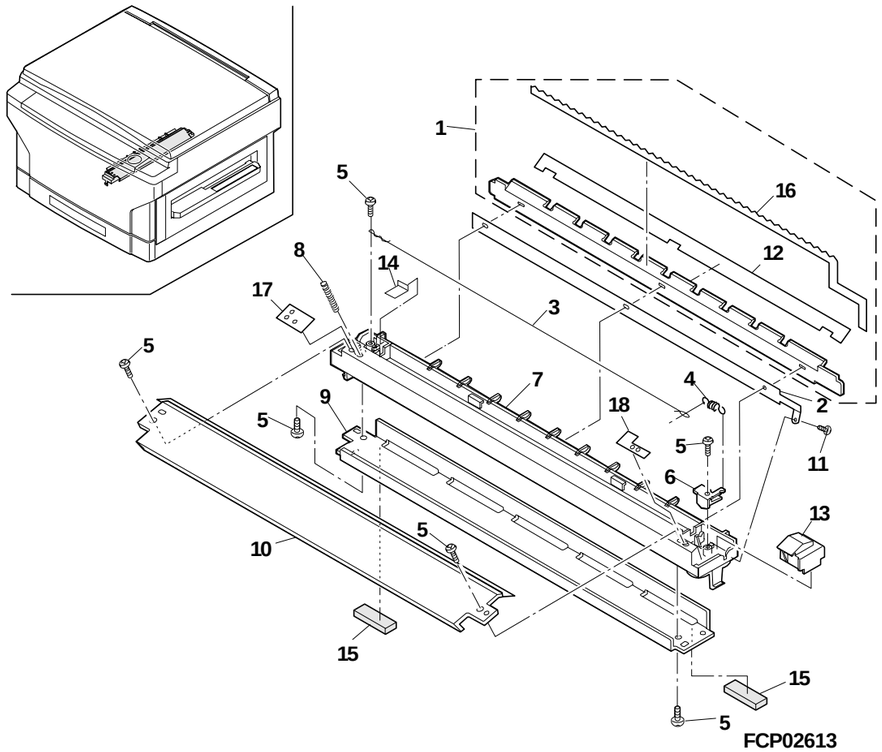

14 High voltage unit

NO.	PARTS CODE	PRICE RANK	NEW MARK	PART RANK	DESCRIPTION
1	LHLDZ1202FCZ1	AP		C	Socket holder
2	XBPSD30P14000	AA		C	Screw (3×14)
3	MSPRC2232FCZZ	AB		C	Electrode spring
4	QSLP-0171FCZZ	AC		C	MC socket electrode B
5	QSLP-0170FCZZ	AC		C	MC socket electrode A
6	LX-BZ0735FCZZ	AA		C	Screw
7	QSLP-0173FCZZ	AB		C	BC socket electrode
8	QSLP-0169FCZZ	AG		C	TC socket electrode
9	MSPRC2192FCZZ	AB		C	TC case GND spring
⚠ 10	RTRNZ0487FCZ2	BH		B	High voltage transformer
11	DHAi-2313FCZZ	AK		C	MC PWB interface harness
12	DUNT-6733FCZZ	AF		E	TC core unit (B-01-A)
13	XBPSD30P06K00	AA		C	Screw (3×6K)
14	QSLP-0169FCZ1	AC		C	TC socket electrode B
15	XBPSD30P06000	AA		C	Screw (3×6)
16	PSHEP3728FCZZ	AF		C	TC electrode cover sheet
17	LFiX-0001QSZZ	AD		C	Socket electrode fixing plate
18	XBPSD30P08K00	AA		C	Screw (3×8K)
19	XWHSD30-05070	AA		C	Washer (3HW)
20	LBNDJ0013FCZ1	AA		C	Wire band
	(Unit)				
901	CHLDZ1202FC52	BN		E	Socket holder unit

15 TC case unit

NO.	PARTS CODE	PRICE RANK	NEW MARK	PART RANK	DESCRIPTION
1	CGiDM1493DS52	AP		E	AC guide unit
2	LPLTM4555FCZZ	AK		C	Discharge plate 1
3	DWiR-0466CSZZ	BG		D	Charger wire
4	MSPRT0513FCZ1	AA		C	MC tension spring
5	XEBSD30P06000	AA		C	Screw (3×6)
6	QSLP-0174FCZZ	AB		C	TC electrode A
7	LHLDZ1205FCZ1	AL		C	TC holder
8	MSPRC2205FCZZ	AA		C	Transfer front guide earth spring
9	PCASZ0261FCZZ	AH		C	TC case
10	CGiDH1492DS51	AQ		E	Transfer front guide unit
11	XEPSD30P06000	AA		C	Screw (3×6)
12	PSHEP3743FCZ1	AE		C	AC guide sheet
13	PCOVP1268FCZZ	AD		C	Electrode mold cover
14	PSHEP3772FCZZ	AB		C	TC hold cover F
15	PMLT-0962FCZZ	AA		C	TC cushion
16	PSHEZ3809FCZZ	AE		C	Discharge plate sheet
17	PSPAZ0001QSZZ	AC		C	TC-PG spacer F
18	PSPAZ0002QSZZ	AC		C	TC-PG spacer R
	(Unit)				
901	CCASZ0261FC52	BA		E	TC case unit

16 Single paper feeding unit

NO.	PARTS CODE	PRICE RANK	NEW MARK	PART RANK	DESCRIPTION
1	XRESP40-05000	AA		C	E type ring (4mm)
2	NGERH1028FCZZ	AP		C	Gear 16T
3	LPiNS0133FCZZ	AA		C	Pin (ϕ2-10)
4	NBRGP0266FCZZ	AA		B	Bearing (ϕ5)
5	NROLR1018FCZZ	AN		C	Manual feeding roller S
6	XEBSD30P10000	AA		C	Screw (3×10)
7	PGiDM1507FCZZ	AD		C	Manual feeding guide SR
8	PRNGP0081FCZZ	AA		C	Ring (E4)
9	NGERH0885FCZZ	AC		C	Gear TB
10	NGERH0236FCZZ	AC		C	Stir gear 18T
11	LFRM-0812FCZZ	AQ		C	Manual feeding frame S
12	MLEVP0651FCZZ	AD		C	PID1 actuator
13	LPLTP4577FCZ1	AC		C	Guide friction plate
17	LBNDJ0013FCZ1	AA		C	Wire band
18	XEBSD40P16000	AA		C	Screw (4×16)
19	VHPGP1A22LC-1	AK		B	Photo sensor (GP1A22LC)
20	DHAi-0022QSZZ	AK	N	C	MF interface harness
21	GCAB-0800FCZZ	AV		D	Manual feed exterior S
22	PGiDH1540FCZZ	AD		C	Manual feeding roller guide upper
23	PCLR-0398FCZZ	AB		C	Manual feeding collar
24	XEPSD40P10000	AA		C	Screw (4×10)
25	TLABZ3578FCZZ	AF		C	Manual feed size label (AB series)

16 Single paper feeding unit

NO.	PARTS CODE	PRICE RANK	NEW MARK	PART RANK	DESCRIPTION
25	TLABZ3579FCZZ	AF		C	Manual feed size label (Inch series)
26	XRESP30−06000	AA		C	E type ring (3mm)
27	LPLTM4769FCZZ	AK		C	Manual feed U-turn guide
28	NRŌLP1062FCZZ	AB		C	PF upper roller
29	NSFTZ2135FCZ2	AQ		C	PF upper roller shaft
33	PSHEP3764FCZZ	AD		C	U-turn guide upper sheet
34	LX−WZ0415FCZZ	AA		C	U-turn collar washer
36	MSPRT2290FCZZ	AA		C	Spring U-R
38	XHBSE30P06000	AA		C	Screw (3×6)
39	LX−BZ0728FCZZ	AA		C	Screw (3×8)
40	PCUSS0322FCZZ	AA		C	Shaft fixing cushion
41	PSHEP3765FCZZ	AE		C	Manual feed roller upper sheet
42	XEBSD30P08000	AA		C	Screw (3×8)
43	PSHEP3821FCZZ	AC		C	U-turn guide sheet D
44	PSHEP3822FCZZ	AC		C	U-turn guide sheet E
	(Unit)				
901	CFRM−0812DS57	BC	N	E	Single paper feeding unit (AB series)
	CFRM−0812DS56	BC	N	E	Single paper feeding unit (Inch series)

16 Single paper feeding unit

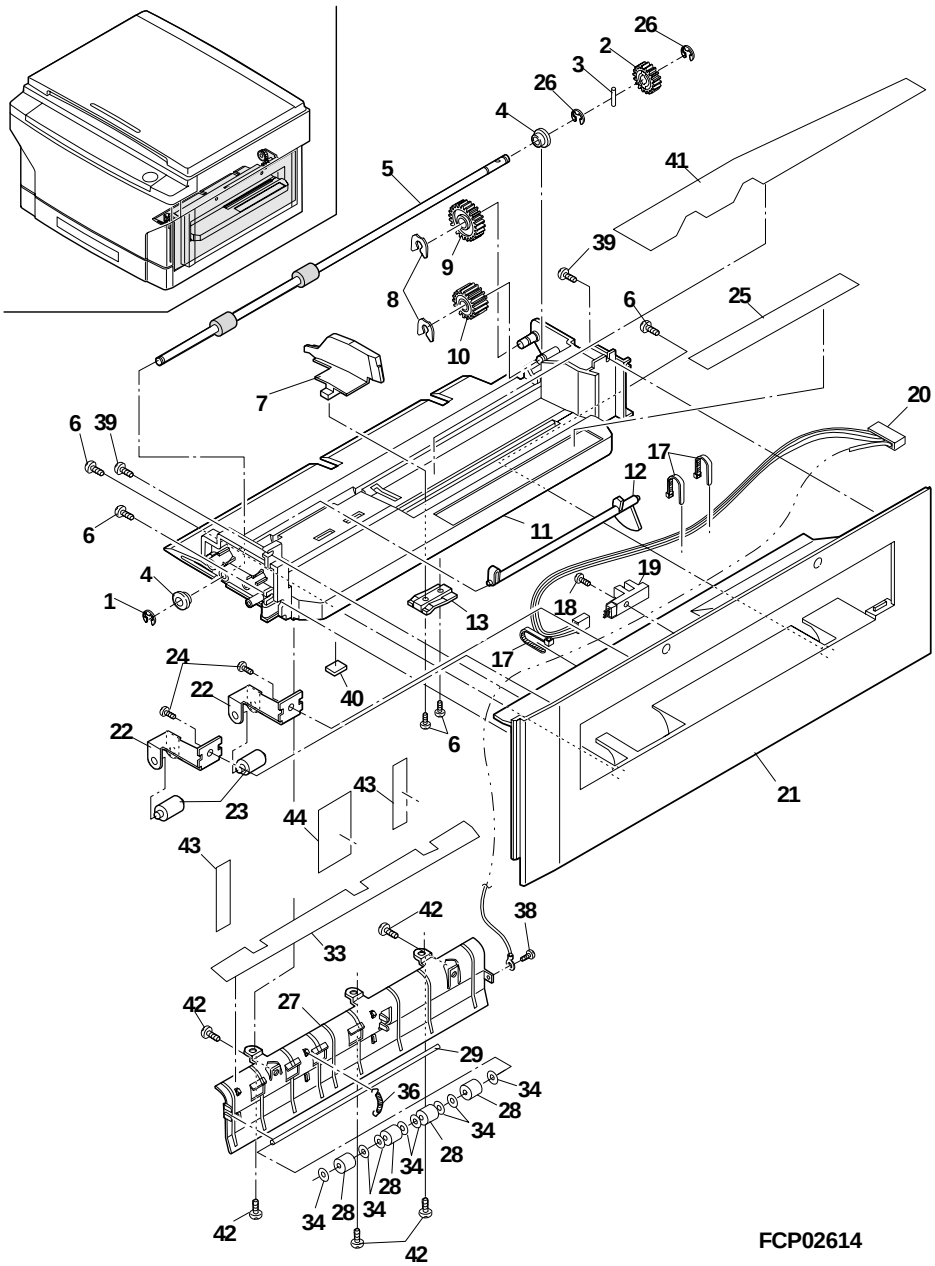

18 250 Tray paper feeding unit

NO.	PARTS CODE	PRICE RANK	NEW MARK	PART RANK	DESCRIPTION
1	CPLTM4554FC01	AF		C	Paper feeding drive plate
2	NGERH1015FCZZ	AD		C	PS joint gear 25T
3	NGERH0885FCZZ	AC		C	Gear TB
4	MARMP0184FCZZ	AD		C	PS joint arm
5	XRESP50−06000	AA		C	E type ring (5mm)
6	MSPRT0001QSZZ	AC		C	PS roller spring
7	NGERH0209FCZ1	AB		C	Delivery roller gear 24T
8	NBRGC0504FCZZ	AC		C	Bearing (F8×12×15 16X)
9	NGERH1017FCZZ	AM		C	Transport gear 19T
10	XEBSE40P12000	AA		C	Screw (4×12)
11	PCLC−0231FCZZ	AW		B	Paper feeding clutch
12	DHAi−2298FC11	AL		C	250 PF interface harness
13	LFRM−0805FCZ1	AQ		C	Paper feeding frame
14	XRESP70−08000	AA		C	E type ring (7mm)
15	NPLYZ0295FCZ1	AM		C	Transport roller pulley
16	NBRGP0510FCZZ	AC		C	Roller bearing
17	NRŌLR1030FCZ1	AT		C	Transport roller
18	PSHEZ3758FCZZ	AC		C	Paper feeding roller brake sheet
19	LHLDZ1204FCZZ	AG		C	Paper feeding roller holder 250
20	MLEVP0659FCZZ	AC		C	PPD1 actuator
21	XEBSD30P06000	AA		C	Screw (3×6)
22	NSFTZ2050FCZ1	AN		C	Paper feeding roller shaft
23	PRNGP0081FCZZ	AA		C	Ring (E4)
24	NRŌLR1049FCZ1	AU		C	Paper feeding roller
25	LPiNS0133FCZZ	AA		C	Pin (ϕ2-10)
26	NBLTH0235FCZZ	AF		B	Belt (80MXL 3.2)
27	NPLYZ0106FCZZ	AC		C	Pulley 22
28	MSPRC2358FCZ1	AC		C	Roller release arm spring
29	MARMP0187FCZZ	AC		C	Roller release arm
30	MSPRC2357FCZZ	AE		C	Limiter spring 250
31	PCLR−0230FCZZ	AD		C	Collar
32	LPiNS0134FCZZ	AB		C	Pin (ϕ2-12)
33	NSFTZ2218FCZZ	AL		C	Roller shaft 250
34	NRŌLR0878FCZ1	AN		C	Roller
35	XRESP40−05000	AA		C	E type ring (4mm)
36	LBNDJ0013FCZ1	AA		C	Wire band
37	CPWBF1071FCE2	AK	N	E	Transport sensor PWB 250
38	XWHSD30−10080	AA		C	Washer
39	XEPSD40P12000	AA		C	Screw (4×12)
40	LX−WZ0407FCZZ	AB		C	Washer
41	XEPSD30P20000	AA		C	Screw (3×20)
43	PCUSS0316FCZZ	AA		C	Cushion for actuator
44	MSPRC2293FCZZ	AA		C	Actuator sprting
46	PGiDM1578FCZZ	AD		C	Paper feeding guide
47	LX−WZ0278FCZZ	AA		C	Washer (ϕ6-11)
48	LBNDJ0013FCZ1	AA		C	Wire band
49	PCUSF0005QSZZ	AD		C	PU roller cushion
50	PCUSF0006QSZZ	AC		C	PU arm cushion
51	PCUSF0004QSZZ	AB		C	PU arm cushion
	(Unit)				
901	CFRM−0805FC55	BN		E	250 Tray paper feeding unit

18 250 Tray paper feeding unit

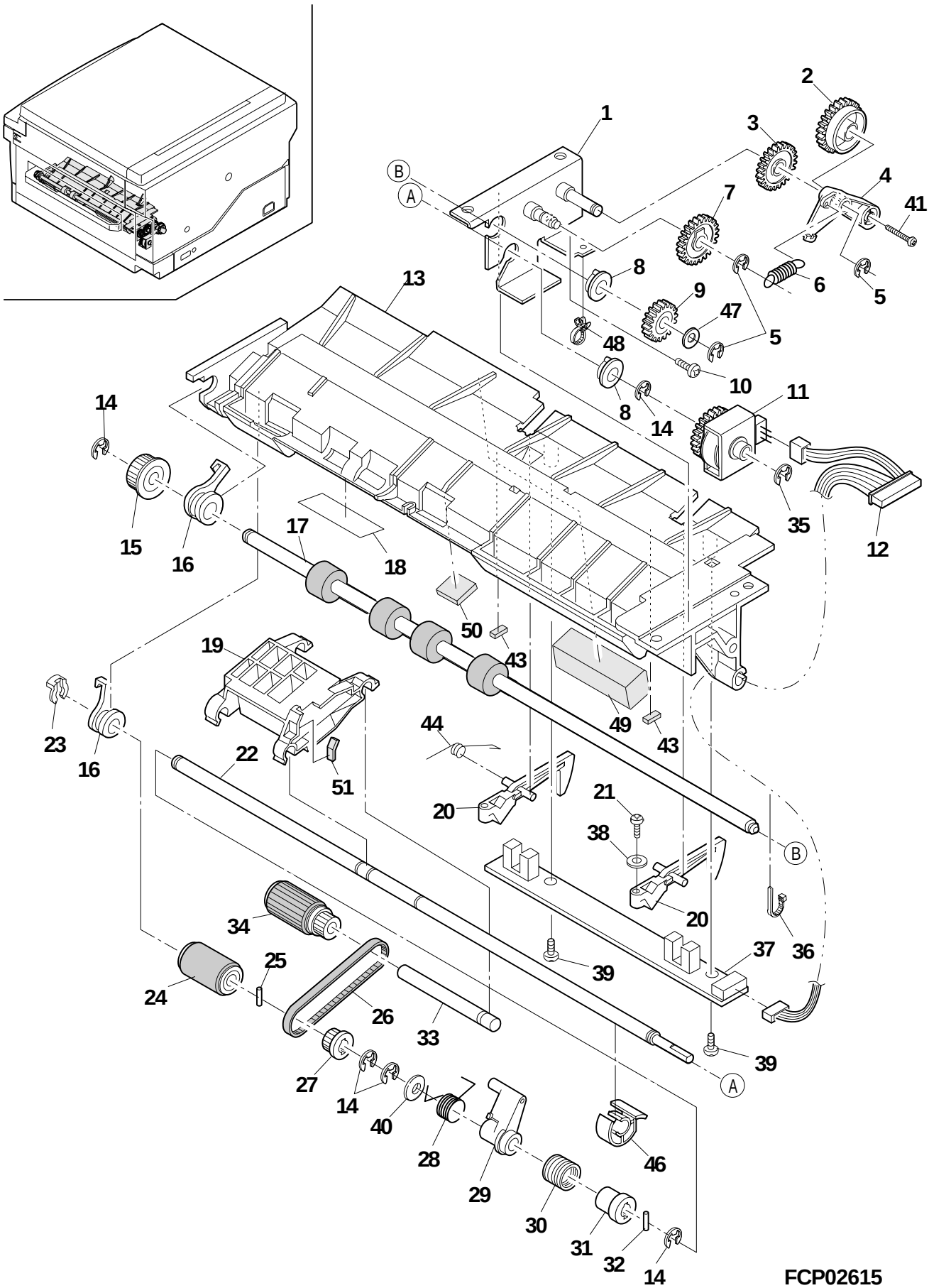

FCP02615

19 250 Tray

NO.	PARTS CODE	PRICE RANK	NEW MARK	PART RANK	DESCRIPTION
1	TLABZ3568FCZZ	AB		C	Indication label
2	LPLTP4556FCZ1	AK		C	Tray side plate 250
3	PCUSS0300FCZZ	AB		C	Tray cushion
4	MSPRC1873FCZ1	AB		C	Tray spring
7	LDAiU0485FCZZ	AC		C	Off center adjusting block
8	XEBSE40P12000	AA		C	Screw (4×12)
9	GCASP0164FCZ2	AZ		D	Tray 250
10	HiNDP0481FCZZ	AG		D	Tray size indicator (AB series)
	HiNDP0482FCZZ	AG		D	Tray size indicator (Inch series)
11	TLABZ3567FCZZ	AE		C	Tray instruction label
12	LPLTM2642FCGZ	AD		C	Tray rear plate
13	PCOVP1237FCZZ	AF		C	Traye cover 250
14	XEBSE30P08000	AA		C	Screw (3×8)
16	XEBSE40P06000	AA		C	Scwer (4×6)
17	PCUSS0316FCZZ	AA		C	Cushion for actuator

19 250 Tray

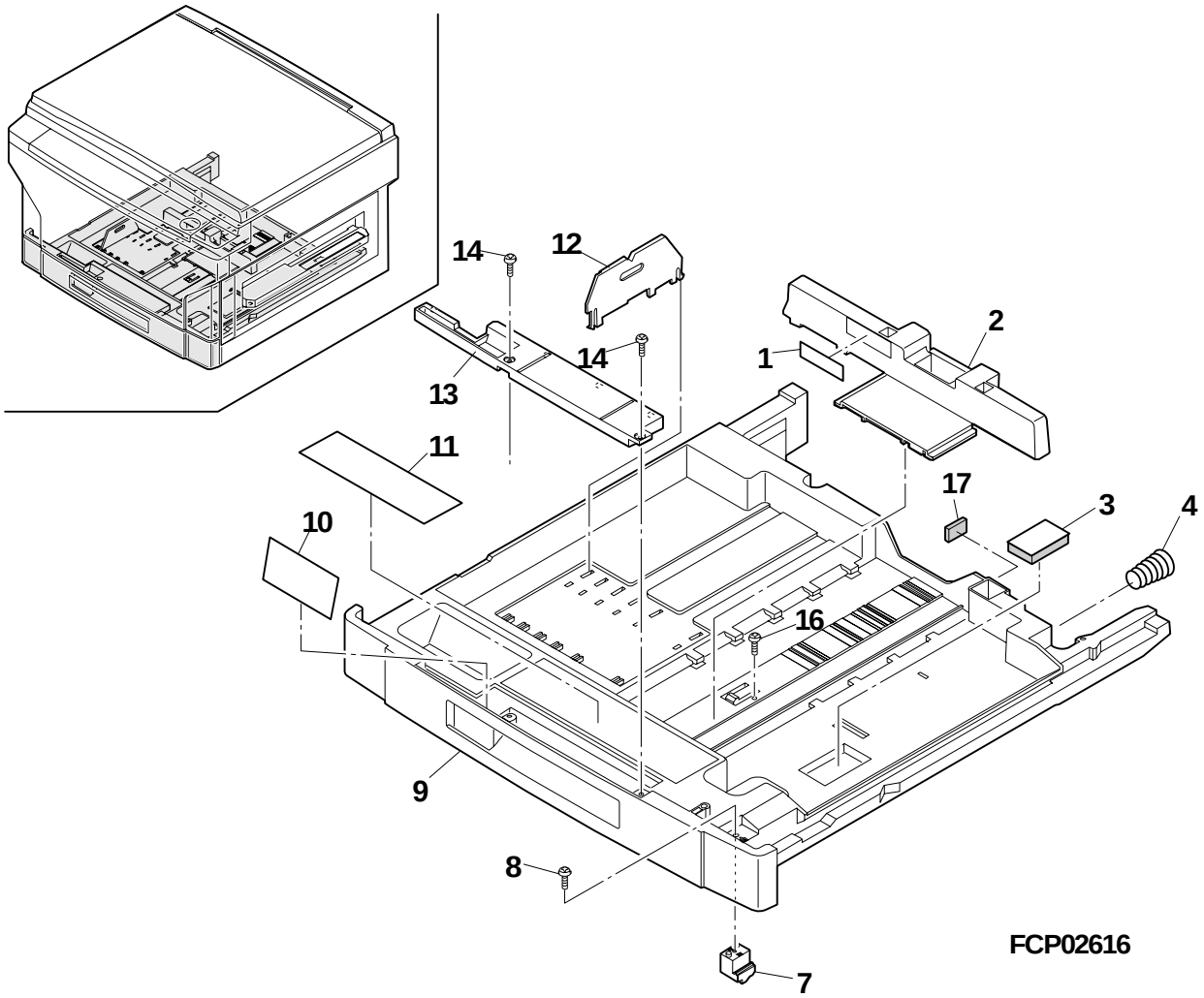

20 Main PWB

NO.	PARTS CODE	PRICE RANK	NEW MARK	PART RANK	DESCRIPTION
1	PRDAR0060FCZZ	AK		C	Heat sink
2	QCNCM0597FCZZ	AC		C	Connector (10pin) [CAN]
3	QCNCM0598FCZZ	AC		C	Connector (11pin) [CNG]
4	QCNCM0878FCZZ	AF		C	Connector (30pin) [CNH]
5	QCNCM0923FC10	AE		C	Connector (10pin) [CND]
6	QCNCM0923FC14	AE		C	Connector (14pin) [CNB]
7	QCNCM0923FC32	AG		C	Connector (32pin) [CNI]
8	QCNCM7014SC0C	AA		C	Connector (3pin) [CNK]
9	QCNCM7014SC0E	AB		C	Connector (5pin) [CNE]
10	QCNCM7014SC0F	AB		C	Connector (6pin) [CNC]
11	QCNCM7014SC0H	AB		C	Connector (8pin) [CNF]
12	QCNCW0373FCZZ	AC		C	Connector (8pin) [CNJ]
13	QSŌCZ6408ACZZ	AB		C	IC socket (8pin) [for IC103]
14	RC−AZ0358FCZZ	AE		C	Capacitor (5.5WV 4.7μF) [C105]
15	RCRM−0001FCZZ	AD		B	Ceramic oscilator (8.00MHz) [X101]
16	RH−DZ0016FCZZ	AB		B	Diode (MA700) [D104,105]
17	VCCCTV1HH330J	AA		C	Capacitor (50WV 33pF) [C149]
18	VCEAGU1CW476M	AB		C	Capacitor (16WV 47μF) [C104,130]
19	VCEAGU1HW474M	AA		C	Capacitor (50WV 0.47μF) [C101,107]
20	VCEAGA1VW106M	AA		C	Capacitor (35WV 10μF) [C108]
21	VCEAGU1VW476M	AB		C	Capacitor (35WV 47μF) [C102]
22	VCEAGU1HW477M	AD		C	Capacitor (50WV 470μF) [C103]
23	VCKYTV1HB102K	AA		C	Capacitor (50WV 1000pF) [C110~114,120,123,124,126,136,138,139,a1~8]
24	VCKYTV1HB222K	AA		C	Capacitor (50WV 2200pF) [C118,119]
25	VCKYTV1HB223K	AA		C	Capacitor (50WV 0.022μF) [C115,121,125,128,132,134,135,137,140~148,150,151,b2]
26	VCKYTV1HB471K	AA		C	Capacitor (50WV 470pF) [C116,117]
27	VCKYTV1HB473K	AA		C	Capacitor (50WV 0.047μF) [C133]
28	VCQYNU1HM103K	AA		C	Capacitor (50WV 0.010μF) [C131]
29	VCQYNU1HM104K	AB		C	Capacitor (50WV 0.10μF) [C106,CB1]
30	VHDDAN202K／−1	AB		B	Diode (DAN202K) [D118]
31	VHDDAP202K／−1	AB		B	Diode (DAP202K) [D119]
32	VHDDSM1D1／／−1	AB		B	Diode (DSM1D1) [D108,109]
33	VHDDSS131／／−1	AA		B	Diode (DSS131) [D101]
34	VHDDSS133／／−1	AA		B	Diode (DSS133) [D102,103,106,107,114~117,DB1~4]
35	VHEHZS5B3／／−V	AB		B	Zener diode (HZS5B3) [ZD104,105,106]
36	VHEHZS7A1／／−1	AB		B	Zener diode (HZS7A1) [ZD103]
37	VHERD13EB1／−1	AB		B	Zener diode (RD13EB1) [ZD101,102]
38	VHiLM324NS／−S	AC		B	IC (LM324NS) [IC111]
39	VHiLM339NS／−1	AD		B	IC (LM339NS) [IC112]
40	VHiM51953BL−1	AF		B	IC (M51953BL) [IC113]
41	VHiSLA7024MT／	AS		B	IC (SLA7024MT) [IC107]
42	VHiSN74LS07NS	AF		B	IC (SN74LS07NS) [IC109]
43	VHiTA7291S／−1	AF		B	IC (TA7291S) [IC105]
44	VHiTA78057S−1	AE		B	IC (TA78057S) [IC101]
45	VHiULN2003AN1	AE		B	IC (ULN2003AN1) [IC102,104,106,108]
46	VHiX24022／／−1	AL		B	IC (X24022) [IC103]
47	VHi37702M6248	BA		B	IC (37702M6248) [IC110]
48	VRD−HT2HY222J	AA		C	Resistor (1/2W 2.2KΩ ±5%) [R105,106]
49	VRD−HT2HY823J	AB		C	Resistor (1/2W 82KΩ ±5%) [R102]
50	VRS−HT3DA1R0J	AB		C	Resistor (2W 1.0Ω ±5%) [R103,104]
51	VRS−HT3DA102J	AA		C	Resistor (2W 1.0KΩ ±5%) [R101]
52	VRS−TS2AD101J	AA		C	Resistor (1/10W 100Ω ±5%) [R116,RB2]
53	VRS−TS2AD102F	AA		C	Resistor (1/10W 1KΩ ±1%) [R146]
54	VRS−TS2AD102J	AA		C	Resistor (1/10W 1.0KΩ ±5%) [R107~109,112,123,132,135,136,159,173,174,180,190,192]
55	VRS−TS2AD103F	AA		C	Resistor (1/10W 10KΩ ±1%) [R147]
56	VRS−TS2AD103J	AA		C	Resistor (1/10W 10KΩ ±5%) [R121,133,134,153,161,175,176,177,178,188,193,195~198,a1~8,b1,b4]
57	VRS−TS2AD104J	AA		C	Resistor (1/10W 100KΩ ±5%) [R194]
58	VRS−TS2AD105J	AA		C	Resistor (1/10W 1MΩ ±5%) [R199]
59	VRS−TS2AD153F	AA		C	Resistor (1/10W 15KΩ ±1%)(120V) [R110,165,166,167]
	VRS−TS2AD153F	AA		C	Resistor (1/10W 15KΩ ±1%)(Except 120V) [R110,165,166]
	VRS−TS2AD243F	AB		C	Resistor (1/10W 24KΩ ±1%)(Except 120V) [R167]
60	VRS−TS2AD204F	AA		C	Resistor (1/10W 200KΩ ±1%) [R148,151,152,169]
61	VRS−TS2AD222J	AA		C	Resistor (1/10W 2.2KΩ ±5%) [R163,182,200]
62	VRS−TS2AD223J	AA		C	Resistor (1/10W 22KΩ ±5%) [R126]
63	VRS−TS2AD242J	AA		C	Resistor (1/10W 2.4KΩ ±5%) [R118,119,145]
64	VRS−TS2AD302J	AA		C	Resistor (1/10W 3.0KΩ ±5%) [R171]
65	VRS−TS2AD303F	AA		C	Resistor (1/10W 30KΩ ±1%) [R155]
66	VRS−TS2AD334F	AA		C	Resistor (1/10W 330KΩ ±1%) [R154]
67	VRS−TS2AD392J	AA		C	Resistor (1/10W 3.9KΩ ±5%) [R137]
68	VRS−TS2AD432F	AA		C	Resistor (1/10W 4.3KΩ ±1%) [R150]
69	VRS−TS2AD472J	AA		C	Resistor (1/10W 4.7KΩ ±5%) [R202]
70	VRS−TS2AD473F	AA		C	Resistor (1/10W 47KΩ ±1%) [R168]
71	VRS−TS2AD473J	AA		C	Resistor (1/10W 47KΩ ±5%) [R113,114,120,124,125,160,RB3]
72	VRS−TS2AD562F	AA		C	Resistor (1/10W 5.6KΩ ±1%) [R156,157,158]
73	VRS−TS2AD562J	AA		C	Resistor (1/10W 5.6KΩ ±5%) [R111,122,127,131,189,191,201]
74	VRS−TS2AD621J	AA		C	Resistor (1/10W 620Ω ±5%) [R117]
75	VRS−TS2AD751J	AA		C	Resistor (1/10W 750Ω ±5%) [R115]
76	VRS−TS2AD822F	AA		C	Resistor (1/10W 8.2KΩ ±1%) [R149]
77	VRS−TS2AD823F	AA		C	Resistor (1/10W 82KΩ ±1%)(120V) [R170]

20 Main PWB

NO.	PARTS CODE	PRICE RANK	NEW MARK	PART RANK	DESCRIPTION
77	VRS−TS2AD124F	AB		C	Resistor (1/10W 120KΩ ±1%)(Except 120V) [R170]
78	VSDTA114YK/−1	AC		B	Transistor (DTA114YK) [Q109,110,111]
79	VSDTC114YK/−1	AC		B	Transistor (DTC114YK) [Q105,107]
80	VSDTC115EK146	AC		B	Transistor (DTC115EK146) [QB1]
81	VSDTC124GK146	AC		B	Transistor (DTC124GK146) [QB2]
82	VS2SC2411K/−1	AB		B	Transistor (2SC2411K) [Q108]
83	VS2SD1383KB−1	AC		B	Transistor (2SD1383KB) [QB3]
84	VS2SD2045−/−1	AH		B	Transistor (2SD2045) [Q101]
85	XBBSD30P06000	AA		C	Screw (3×6)
86	XBPSD30P06K00	AA		C	Screw (3×6K)
87	XBPSD30P08K00	AA		C	Screw (3×8K)
88	VRS−TP2BD000J	AA		C	Resistor (1/8W 0Ω ±5%)
	(Unit)				
901	CPWBF0001QSE1	BP	N	E	Main PWB (120V)
	CPWBF0001QSE2	BP	N	E	Main PWB (Except 120V)

21 Operation PWB

NO.	PARTS CODE	PRICE RANK	NEW MARK	PART RANK	DESCRIPTION
1	QCNCM0611FCZZ	AE		C	Connector (10pin) [CN-A]
2	QCNCM0876FCZZ	AB		C	Connector (4pin) [CN-B]
3	QSW−P0465FCZZ	AC		B	Tact switch (SKHVPB) [PSW,CLK,1K~9K,0K,CSK,EUK,EK,EMK]
	QSW−P0465FCZZ	AC		B	Tact switch (SKHVPB) [ZOK,ZUK,ZDK,RESK]
4	RC−KZ0287FCZZ	AA		C	Capacitor (22000pF) [C402,409]
5	RMPTC3102QCJB	AA		B	Block resistor (1.0KΩ×3 1/8W ±5%) [BR401]
6	VCEAJU1CW476M	AB		C	Capacitor (16WV 47μF) [C401]
7	VCKYPU1HB102K	AA		C	Capacitor (50WV 0.001μF) [C410]
8	VCKYPU1HB221K	AB		C	Capacitor (50WV 220pF) [C406,407,408]
9	VHDDSM1D1//−1	AB		B	Diode (DSM1D1) [D407]
10	VHDDSS133//−1	AA		B	Diode (DSS133) [D401~406]
11	VHiLC7935//−1	AN		B	IC (LC7935) [IC401]
12	VHPLB−403MF1/	AR		B	Photo transistor (LB-403MF1) [LEDM]
13	VHPSLR322MC3F	AC		B	LED(Green) (SLR322MC3F) [PSL,RPL,CSL1,CSL2,EXL1~5,AEL,MEL,PHL]
	VHPSLR322MC3F	AC		B	LED(Green) (SLR322MC3F) [ZOL,ELL1,2,NOL,RDL1,2,CSL3]
14	VHPSLR322VC3F	AC		B	LED(Red) (SLR322VC3F) [TEL,PEL,JAML,CRUL,MTL]
15	VRD−HT2EY102J	AA		C	Resistor (1/4W 1.0KΩ ±5%) [R402~404,413]
16	VRD−HT2EY151J	AA		C	Resistor (1/4W 150Ω ±5%) [R401,416~421,423~425,427~429]
	VRD−HT2EY151J	AA		C	Resistor (1/4W 150Ω ±5%) [R406,414,415]
17	VRD−HT2EY201J	AA		C	Resistor (1/4W 200Ω ±5%) [R405,407~412,426,430]
18	VSDTB113ZS/−1	AC		B	Transistor (DTB113ZS) [Q401,402]
19	DHAi−2399FCZZ	AD		C	Operation PWB earth harness [FG]
	(Unit)				
901	CPWBF1052FCE2	BB	N	E	Operation PWB B

22 AC circuit PWB

NO.	PARTS CODE	PRICE RANK	NEW MARK	PART RANK	DESCRIPTION
1	DHAi−0026QSZZ	AE		C	AC PWB earth harness [FG]
2	PRDAF0044FCZZ	AC		C	Heat sink (SP2224) [for TD502]
3	PRDAF0062FCZZ	AE		C	Heat sink A [for TD501]
4	PRDAF0063FCZZ	AF		C	Heat sink B [for BD501]
5	PSHEZ2727FCZZ	AC		C	Insulator sheet [for TD501]
6	QCNCM0672FCZZ	AB		C	Connector (2pin)(100V series) [CNA]
	QCNCW0843FCZZ	AC		C	Connector (2pin)(200V series) [CNA]
7	QCNCM1069ACZZ	AD		C	Connector (6pin) [CNB]
8	QCNCM7014SC0D	AB		C	Connector (4pin) [CNC]
9	QCNCW0448FCZZ	AB		C	Connector (8pin) [CNE]
⚠ 10	QFS−B0030FCZZ	AH		A	Fuse (15A 250V)(100V series) [F501]
⚠	QFS−C1500QCZZ	AF		A	Fuse (10A 240V)(200V series) [F501,502]
⚠ 11	QFS−D0331QCZZ	AD		A	Fuse (3.15A 125V)(100V series) [F503]
⚠	QFS−D1326QCZZ	AD		A	Fuse (3.15A 250V)(200V series) [F503]
⚠ 12	QFS−D0430QCZZ	AD		A	Fuse (5A 125V)(100V series) [F504]
⚠	QFS−D1422QCZZ	AD		A	Fuse (5A 250V)(200V series) [F504]
⚠ 13	QFS−D1330QCZZ	AD		A	Fuse (1A 250V)(100V series) [F505]
⚠	QFS−D1325QCZZ	AD		A	Fuse (1A 250V)(200V series) [F505]
14	QFSHA0025FCZZ	AA		C	Fuse holder (S-N5057-01) [for F503~505]
15	QFSHD0001QCZZ	AA		C	Fuse holder (C2680R-H) [for F501,502]
16	QTANP0115FCZZ	AB		C	Tab terminal (T86032) [No,Lo,N1,HLL,L1,L2]
17	QTANP0116FCZZ	AA		C	Tab terminal (T46036) [CLL]
18	QTANP0189FCZZ	AC		C	Tab terminal [CND]
19	RC−KZ472ANC3A	AD		C	Capacitor (1KV 4700pF) [C501,503]
21	RCiLF0048FCZZ	AG		C	Coil (100μH 3A) [L503]
22	RMPTA0031FCZZ	AE		C	CR mix part (ECQ-J0186X) [CR501,502]
23	RRLYD6122QCZZ	AM		B	Relay (0MIH-SS-124LM) [RY501]
24	VCEAAL1HC682M	AP		B	Capacitor (50WV 6800pF) [C509]
25	VCEASU1EC222M	AE		C	Capacitor (25WV 2200pF) [C510]
26	VCFYEG2EA224M	AE		C	Capacitor (250WV 0.22μF)(100V series) [C506]
27	VCFYEG2EA474M	AG		C	Capacitor (250WV 0.47μF)(200V series) [C505]
28	VCQYNU1HM104K	AB		C	Capacitor (50WV 0.10μF) [C507,508]
29	VHDDSM1D1//−1	AB		B	Diode (DSM1D1) [D501]
30	VHDRBV608//−1	AH		B	Diode (RBV608) [BD501]
31	VHDS1NB60//−1	AD		B	Diode (S1NB60) [BD502]
32	VHDS1ZB60//−1	AC		B	Diode (S1ZB60) [BD503]
33	VHRS11MD5V/−1	AF		B	Photo thyristor (S11MD5V)(100V series) [SSR501,502]
	VHRS21MD3V/−1	AE		B	Photo thyristor (S21MD3V)(200V series) [SSR501,502]
34	VHSTM1641P−L1	AP		B	HL triac (TM1641P-L1)(100V series) [TD501]
	VHSTM1661P−L1	AP		B	HL triac (TM1661P-L1)(200V series) [TD501]
35	VHSTM1661S−LF	AK		B	CL triac (TM1661S) [TD502]
36	VRD−HT2EY105J	AA		C	Resistor (1/4W 1.0MΩ ±5%)(100V series) [R502]
	VRD−HT2EY474J	AA		C	Resistor (1/4W 470KΩ ±5%)(200V series) [R502]
37	VRD−HT2EY243J	AA		C	Resistor (1/4W 24KΩ ±5%) [R508]
38	VRS−HT2HA101J	AA		C	Resistor (1/2W 100Ω ±5%) [R504,506]
39	VRS−HT2HA121J	AA		C	Resistor (1/2W 120Ω ±5%)(100V series) [R503,505]
	VRS−HT2HA201J	AA		C	Resistor (1/2W 200Ω ±5%)(200V series) [R503,505]
40	XBPSD30P08K00	AA		C	Screw (3×8K) [for TD502]
41	XBPSD30P10K00	AA		C	Screw (3×10K) [for TD501,BD501]
42	XNESD30−24000	AA		C	Nut (ϕ3) [for TD502]
43	PSHEZ3771FCZZ	AD		C	AC insulator sheet (200V series) [for TD501]
	(Unit)				
⚠ 901	CPWBF1053FCE2	AW	N	E	AC circuit PWB (100V series)
⚠	CPWBF1053FCE7	AW	N	E	AC circuit PWB (200V series)

23 Lower unit PWB

NO.	PARTS CODE	PRICE RANK	NEW MARK	PART RANK	DESCRIPTION
1	DHAi−2316FCZZ	AD		C	High voltage harness (BC)
2	PSHEP3665FCZZ	AB		C	Lower unit PWB protect sheet
3	QCNCM0594FCZZ	AB		C	Connector (173981-7) [CN-C]
5	QCNCM7014SC0C	AA		C	Connector (3pin) [CN-D]
6	QCNCM7014SC0G	AB		C	Connector (7pin) [CN-B]
7	QCNCM7014SC1J	AC		C	Connector (10pin) [CN-A]
8	QCNCW0745FCZZ	AB		C	Connector (3pin) [CN-E]
9	QTANP0116FCZZ	AA		C	Tab terminal (T46036) [BIAS]
10	RR−XA02R0SC2E	AC		B	Fuse resistor (1/4W 2Ω) [FR1]
11	RTRNZ0486FCZZ	AN		B	DV B transformer [T1]
12	RTRNZ0495FCZZ	AP		B	BC transformer [T2]
13	RVR−MD110QCZZ	AE		B	Variable resistor (47KΩ) [VR2]
14	VCCCPU2HH390J	AC		C	Capacitor (500WV 39pF) [C12]
15	VCEAGU1AW476M	AA		C	Capacitor (10WV 47μF) [C8]
16	VCEAGU1EW475M	AA		C	Capacitor (25WV 4.7μF) [C4]
17	VCEAGU1HW476M	AB		C	Capacitor (50WV 47μF) [C10]
18	VCEAGU1VW476M	AB		C	Capacitor (35WV 47μF) [C7]
19	VCKYPU1HB332K	AA		C	Capacitor (50WV 3300pF) [C3]
20	VCKYPU1HB391K	AA		C	Capacitor (50WV 390pF) [C1,2]
21	VCKYPU1HB472K	AA		C	Capacitor (50WV 4700pF) [C11,16,17,25]
22	VCKYPU1HF223Z	AA		C	Capacitor (50WV 0.022μF) [C5,9,14,24,26]
23	VCKYPU3AB102K	AC		C	Capacitor (1000WV 1000pF) [C15]
24	VCKYPU3FB221K	AB		C	Capacitor (3150WV 220pF) [C20~23]
25	VCQYNU1HM103K	AA		C	Capacitor (50WV 0.010μuF) [C13,19]
26	VHDDSS131//−1	AA		B	Diode (DSS131) [D8,12]
27	VHDDSS133//−1	AA		B	Diode (DSS133) [D1,6,7,10,11]
28	VHDEU2A////−1	AC		B	Diode (EU2A) [D9]
29	VHDSHV02///−1	AD		B	Diode (SHV02) [D13~16]
30	VHEHZ6A1///−1	AB		B	Zener diode (HZ6A1) [ZD1,3]
31	VHEHZ7A3///−1	AB		B	Zener diode (HZ7A3) [ZD2,4]
32	VHiNJU3715L−1	AM		B	IC (NJU3715L) [IC1]
33	VHiULN2003AN1	AE		B	IC (ULN2003AN1) [IC2,3]
34	VRD−HT2EY102J	AA		C	Resistor (1/4W 1.0KΩ ±5%) [R24~26]
35	VRD−HT2EY103J	AA		C	Resistor (1/4W 10KΩ ±5%) [R8,17]
36	VRD−HT2EY113J	AA		C	Resistor (1/4W 11KΩ ±5%) [R19]
37	VRD−HT2EY124J	AA		C	Resistor (1/4W 120KΩ ±5%) [R15]
38	VRD−HT2EY163J	AA		C	Resistor (1/4W 16KΩ ±5%) [R11]
39	VRD−HT2EY183J	AA		C	Resistor (1/4W 18KΩ ±5%) [R9]
40	VRD−HT2EY202J	AA		C	Resistor (1/4W 2KΩ ±5%) [R20]
41	VRD−HT2EY204J	AA		C	Resistor (1/4W 200KΩ ±5%) [R10,18]
42	VRD−HT2EY223J	AA		C	Resistor (1/4W 22KΩ ±5%) [R7,16]
43	VRD−HT2EY433J	AA		C	Resistor (1/4W 43KΩ ±5%) [R23]
44	VRD−HT2EY473J	AA		C	Resistor (1/4W 47KΩ ±5%) [R4]
45	VRD−HT2EY511J	AA		C	Resistor (1/4W 510Ω ±5%) [R27,28,30]
46	VRD−HT2EY512J	AA		C	Resistor (1/4W 5.1KΩ ±5%) [R1,2]
47	VRD−HT2EY514J	AA		C	Resistor (1/4W 510KΩ ±5%) [R13]
48	VRD−HT2EY622J	AA		C	Resistor (1/4W 6.2KΩ ±5%) [R12]
49	VRD−HT2EY751J	AA		C	Resistor (1/4W 750Ω ±5%) [R29]
50	VRD−HT2EY752J	AA		C	Resistor (1/4W 7.5KΩ ±5%) [R3]
51	VRD−HT2HY305J	AB		C	Resistor (1/2W 3.0MΩ ±5%) [R14]
52	VRD−HT2HY514J	AA		C	Resistor (1/2W 510KΩ ±5%) [R21]
53	VRHYKU3AD256K	AG		C	Resistor (1W 25MΩ ±10%) [R22]
54	VS2SA1048Y/−1	AB		B	Transistor (2SA1048Y) [Q2]
55	VS2SC2458Y/−1	AB		B	Transistor (2SC2458Y) [Q1,4,5]
56	VS2SC2752K/−1	AE		B	Transistor (2SC2752K) [Q3]
57	VS2SD2374A/−1	AE		B	Transistor (2SD2374A) [Q6]
58	VCEAGU1HW335M	AA		C	Capacitor (50WV 3.3μF) [C27]
59	VRD−HT2EY101J	AA		C	Resistor (1/4W 100Ω ±5%) [R31]
60	RVR−M151AQCZZ	AF		B	Variable resistor (100KΩ) [VR1]
	(Unit)				
901	CPWBF1055FCE1	AZ	N	E	Lower unit PWB

25 Packing material & Accessories

NO.	PARTS CODE	PRICE RANK	NEW MARK	PART RANK	DESCRIPTION
1	U B A G F 0 0 3 9 F C Z Z	AG		D	Vinyl bag for body
2	S P A K A 0 0 1 8 Q S Z Z	AS		D	Top packing cushion AB
3	T i N S E 0 0 3 2 Q S Z Z	AP	N	D	Operation manual A/B (English)
	T i N S S 0 0 3 3 Q S Z Z	AP	N	D	Operation manual A/B (Spanish)
4	L S Ō U − 0 1 2 9 F C Z 1	AT		D	Delivery tray
6	S P A K A 0 0 1 7 Q S Z Z	AX		D	Bottom packing cushion AB
7	S P A K C 0 0 1 3 R S 2 2		N	D	Packing case A
8	T C A D Z 1 1 5 9 F C Z Z	AA		D	Fixing screw caution card
9	L X − B Z 0 7 1 6 F C Z 2	AD		C	4th,5th mirror lock screw
10	L X − B Z 0 0 0 1 Q S Z Z	AD		C	2nd,3rd mirror fixing screw
11	P S H E Z 3 7 2 6 F C Z Z	AD		D	Protect sheet
12	T C A D Z 1 1 5 9 F C Z Z	AA		D	Fixing screw caution card
14	S P A K A 1 6 2 4 F C Z Z	AB		D	ACC sleeve
15	P S H E Z 3 2 5 8 F C Z Z	AC		D	Protect sheet
101	C C A S Z 0 0 6 7 F C 0 1	AD		D	Maintenance case
103	S S A K A 2 4 4 0 Q C Z Z	AB		D	Vinyl bag

25 Packing material & Accessories

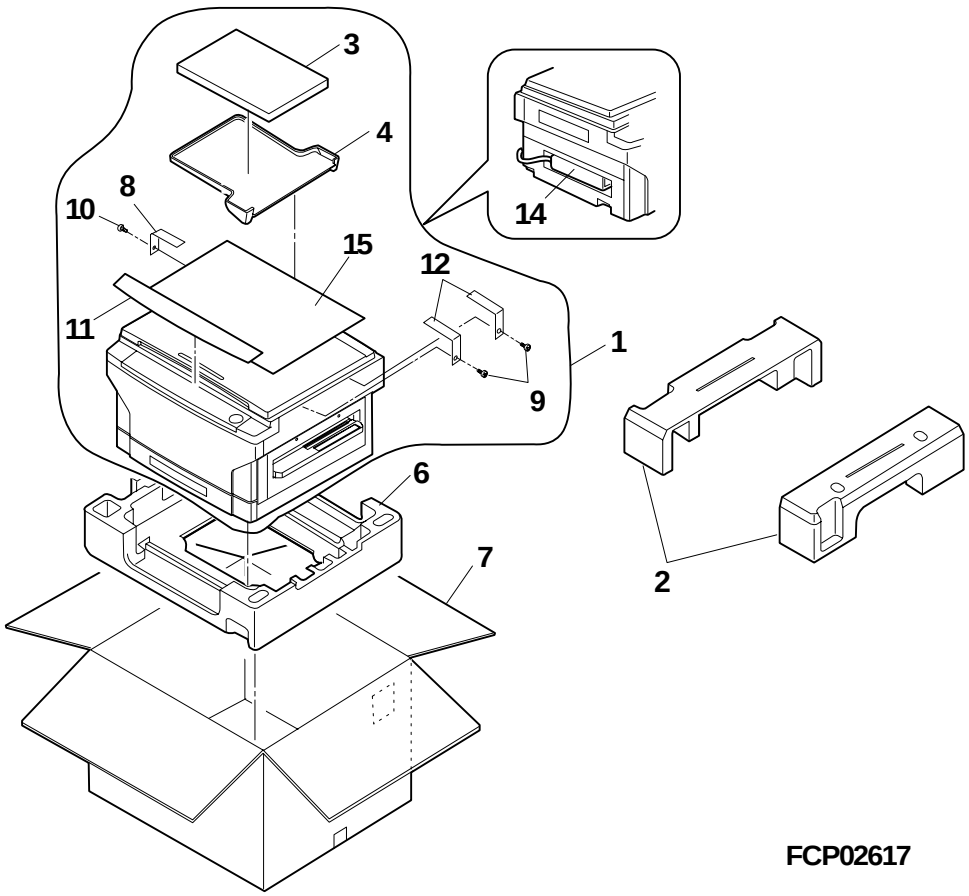

26 SRU unit

NO.	PARTS CODE	PRICE RANK	NEW MARK	PART RANK	DESCRIPTION
1	CHLDZ0005QS51	AV		E	Holder unit
2	PSHEP0004QSZZ	AF		C	MC case sheet
3	PCASZ0001QSZZ	AL		C	MC case L
4	QSLPA0001QSZZ	AF		C	Plate electrode
5	QSLPA0003QSZZ	AF		C	Grid electrode
6	QSLPA0002QSZZ	AE		C	MC case electrode
7	LHLDZ0002QSZZ	AL		C	MC holder R
8	LPLTZ0003QSZ1	AG		C	Grid
9	LHLDZ0003QSZZ	AD		C	Grid fixing holder
10	LHLDZ0004QSZZ	AH		C	MC holder F
11	XEBSD30P12000	AA		C	Screw (3×12)
12	XEBSD40P10000	AA		C	Screw (4×10)
13	XEBSD30P08000	AA		C	Screw (3×8)
14	UCLE−0004QSZZ	AX		C	Blade L
15	MSPRC0006QSZZ	AB		C	Earth spring 2
16	PMLT−0003QSZZ	AE		C	Toner seal cushion
17	NGERH0001QSZZ	AE		C	Gear 25/20T
18	PRNGP0023FCZZ	AA		C	Grip ring (ϕ7)
19	NGERH0003QSZZ	AD		C	Gear 18T
20	LFRM−0001QSZZ	AT		C	CRU housing lower frame
21	PSEL−0006QSZZ	AG		C	Blade side seal F
22	NBRGP0299FCZZ	AC		C	DV bearing (ϕ5)
23	NSRW−0001QSZZ	AK		C	Toner transport screw
24	PPiPP0002QSZZ	AH		C	Toner pipe
25	PMLT−0002QSZZ	AB		C	Shutter cushion
26	MSPRC0002QSZZ	AD		C	Shutter spring A2
27	PSHT−0002QSZZ	AE		C	Waste toner shutter
28	PSHEP0006QSZZ	AC		C	Shutter sheet
29	PSRA−0001QSZZ	AU		C	Toner holder L
30	MSPRC0004QSZZ	AC		C	Earth spring 1
31	MSPRC0003QSZ1	AB		C	Separator pawl spring A2
32	LPiNS0298FCZZ	AA		C	Pawl shaft pin
33	LX−WZ0285FCZZ	AA		C	Washer
34	CTME−0211FC01	AK		C	DR separator pawl
35	MSPRC0005QSZZ	AB		C	Separator pawl lever spring A2
36	MLEVP0004QSZZ	AE		C	Separator pawl lever
37	PCUSF0007QSZZ	AB		C	Separator pawl lever cushion
38	PGiDM0003QSZZ	AG		C	Transport paper guide
39	LX−WZ0001QSZZ	AC		C	Separator pawl washer
40	PCUSF0008QSZZ	AA		C	Separator pawl LE cushion 2
41	CPLTM0002QS01	AM		C	DR control plate L
42	XBPS230P10000	AA		C	Screw (3×10)
43	XHBS230P10000	AA		C	Screw (3×10)
501	CCASZ0001QS51	BB		E	MC case unit

26 SRU unit

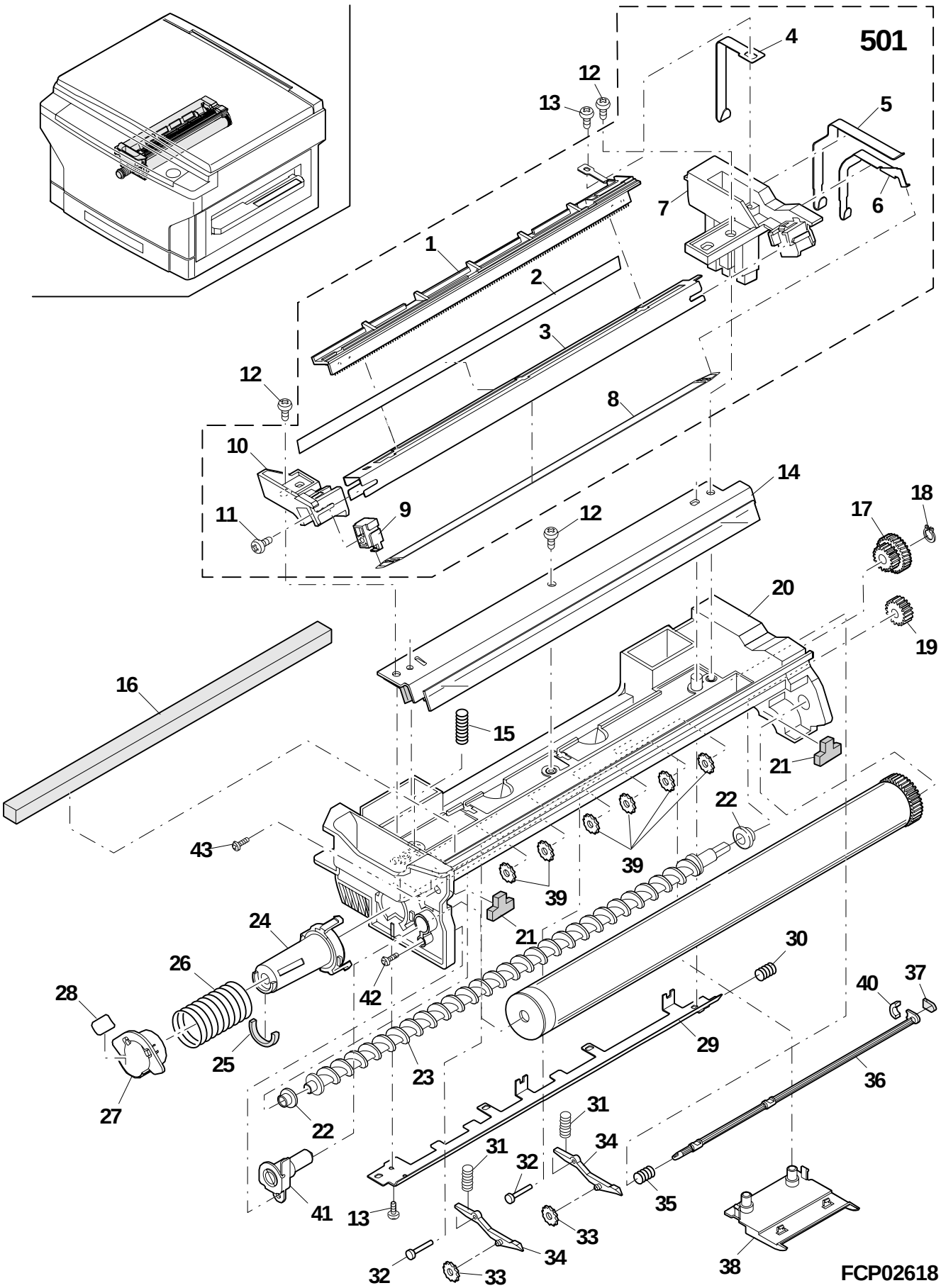
501
1
2
3
4
5
6
7
8
9
10
11
12
13
14
15
16
17
18
19
20
21
22
23
24
25
26
27
28
29
30
31
32
33
34
35
36
37
38
39
40
41
42
43
FCP02618

51 Multi manual paper feeding unit

NO.	PARTS CODE	PRICE RANK	NEW MARK	PART RANK	DESCRIPTION
1	MSPRT2220FCZZ	AA		C	Manual feed spring
2	MARMP0181FCZZ	AC		C	Arm
3	LHLDZ1192FCZZ	AF		C	Solenoid holder
4	RPLU-0300FCZ1	AQ		B	Manual feed solenoid B
5	XRESP40-05000	AA		C	E type ring (4mm)
6	NRŌLR1096FCZZ	AV		C	Manual paper feed roller
7	NGERH0495FCZZ	AC		C	Gear (20T)
8	LPiNS0165FCZZ	AB		C	Pin (ϕ2-8)
9	NBRGP0266FCZZ	AA		B	Bearing (ϕ5)
10	LBŌSZ1031FCZZ	AC		C	Clutch boss
11	MSPRC1152FCZ1	AF		C	Clutch spring
12	PPiPP0108FCZZ	AA		C	Clutch sleeve
13	NGERH0491FCZZ	AE		C	CL gear 16T
14	NSFTZ2062FCZ1	AL		C	Manual feed roller shaft
15	NGERH0892FCZZ	AB		C	16T gear
16	MARMP0180FCZ3	AF		C	Manual feed arm
17	CRŌLP0921FC01	AM		C	Manual feed take-up roller
18	MSPRT2271FCZZ	AB		C	Roller spring
19	NGERH0885FCZZ	AC		C	Gear TB
20	NSFTZ2063FCZZ	AD		C	Input gear shaft
22	XEBSD30P08000	AA		C	Screw (3×8)
23	CRŌLR1048FC31	AV		E	Reversing roller unit
24	LHLDZ1193FCZ1	AD		C	Separator roller holder
25	MSPRC2502FCZZ	AB		C	MF pressure spring
26	LPLTM4576FCZZ	AF		C	Separator roller hold plate
27	PSHEZ3655FCZ1	AC		C	Manual feed sheet
28	PSHEP3599FCZ1	AC		C	Manual feed sheet
29	MARMP0182FCZZ	AE		C	Manual feed gate arm
30	LSTPP0278FCZZ	AC		C	Manual feed stopper
34	LFRM-0811FCZ1	AQ		C	Manual feed frame M
35	LPLTP4577FCZ1	AC		C	Guide friction plate
36	PGiDM1506FCZ1	AC		C	Manual feed guide R
37	RPLU-0299FCZZ	AV		B	Manual feed solenoide A
38	CPWBF1059FC51	AS		E	Manual paper feeding multi PWB
39	XEBSD30P10000	AA		C	Screw (3×10)
40	PGiDM1505FCZZ	AF		C	Tray guide R
41	MLNKP0021FCZZ	AD		C	Tray open and shut link R
42	PRNGP0081FCZZ	AA		C	Ring (E4)
43	GCAB-0799FCZ1	AR		D	Manual feed exterior M
44	MLNKP0020FCZZ	AD		C	Tray open and shut link F
45	PGiDM1504FCZZ	AF		C	Tray guide F
46	TLABZ3578FCZZ	AF		C	Manual paper feed size label (AB series)
	TLABZ3579FCZZ	AF		C	Manual paper feed size label (Inch series)
47	XEBSE30P06000	AA		C	Screw (3×6)
48	LSŌU-0134FCZZ	AM		D	Manual feed tray 1
49	LSŌU-0136FCZZ	AK		D	Manual feed tray 3
50	LSŌU-0135FCZZ	AM		D	Manual feed tray 2
51	LBNDJ0013FCZ1	AA		C	Wire band
52	PSHEZ3699FCZZ	AC		C	Manual feed multi sheet
54	LPLTM4769FCZZ	AK		C	Manual feed U-turn guide
55	NRŌLP1062FCZZ	AB		C	PF upper roller
56	NSFTZ2135FCZ2	AQ		C	PF upper roller shaft
57	PSHEP3761FCZZ	AA		C	U-turn guide sheet A (AB series)
58	PSHEP3762FCZZ	AB		C	U-turn guide sheet B (AB series)
60	PSHEP3764FCZZ	AD		C	U-turn guide upper sheet
61	LX-WZ0415FCZZ	AA		C	U-turn collar washer
63	MSPRT2290FCZZ	AA		C	Spring U-R
64	PSHEP3760FCZZ	AB		C	Manual feed sheet
65	XHBSE30P06000	AA		C	Screw (3×6)
66	LX-BZ0728FCZZ	AA		C	Screw (3×8)
67	PCUSS0322FCZZ	AA		C	Shaft fixing cushion
68	PSHEP3821FCZZ	AC		C	U-turn guide sheet D
69	PSHEP3822FCZZ	AC		C	U-turn guide sheet E

51 Multi manual paper feeding unit

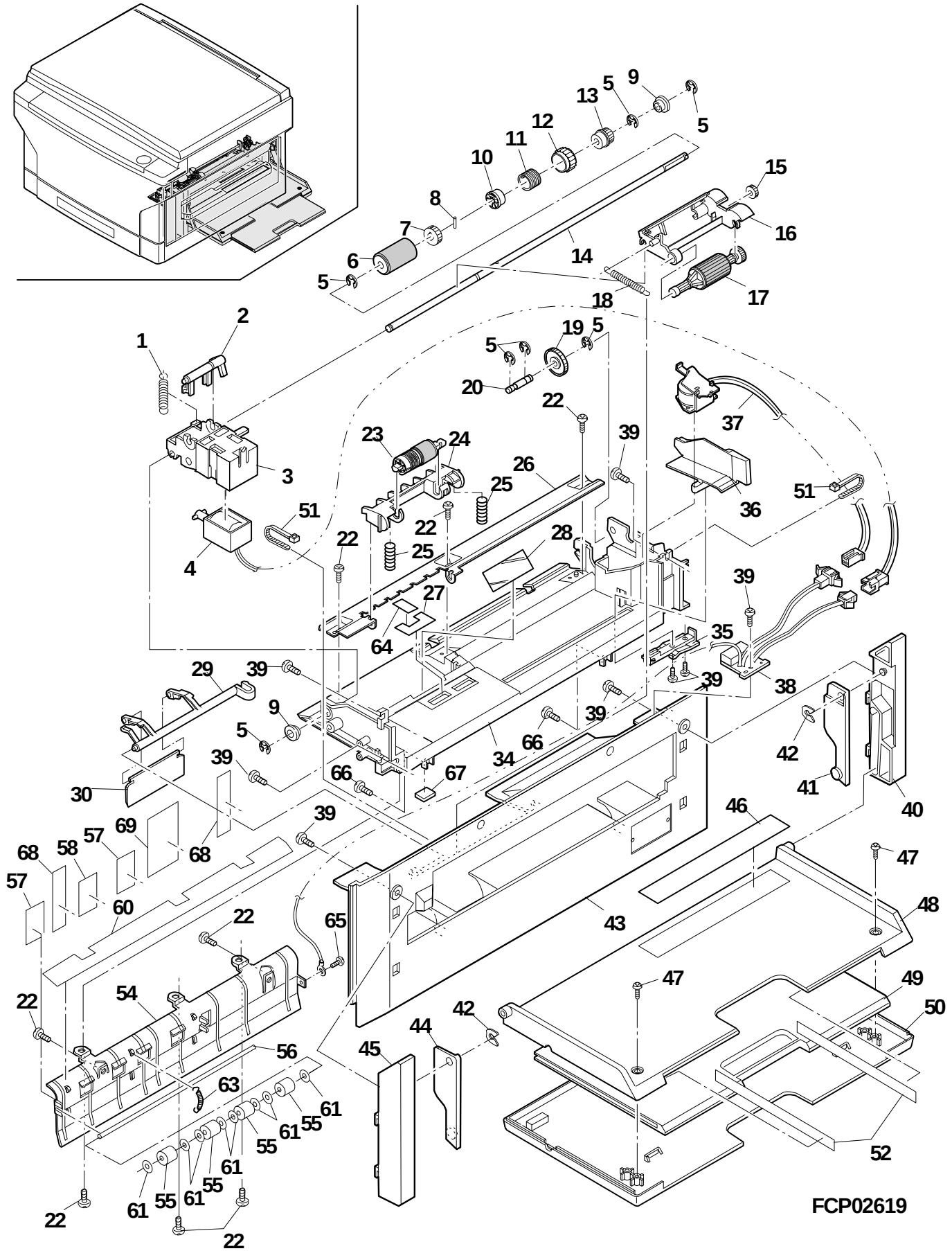

■ Index

PARTS CODE	NO.	PRICE RANK	NEW MARK	PART RANK	
【C】					
CARMM0189FC01	13- 61	AE		C	
CBŌX-0001RS54	9- 55	AW	N	E	
〃	10-901	AW	N	E	
CBŌX-0096FC02	9- 24	AW		D	
CBŌX-0096FC54	9-901	BV		E	
CBRC-0059FC01	10- 1	AK		C	
CBRGP0525FC02	11- 33	AN		B	
CBRGP0528FC02	11- 23	AN		B	
CBTN-0183FC31	4- 2	AH		E	
CBTN-0184FC03	4- 5	AR		C	
CBTN-0185FC01	4- 1	AF		C	
CCAB-0001QS04	1- 1	AY	N	D	
CCASZ0001QS51	26-501	BB		E	
CCASZ0067FC01	25-101	AD		D	
CCASZ0261FC52	15-901	BA		E	
CCLR-0002QS01	9- 17	AG		C	
CCŌVP1229DS01	6- 1	AX		C	
CDAiU0486FC02	6- 51	BF		C	
CFiX-0461FC02	1- 8	AU		C	
CFiX-0461FC03	1- 8	AS		C	
CFRM-0801FC08	5- 44	AX	N	C	
CFRM-0802FC01	13-105	AR		C	
CFRM-0803FC01	13-106	AV		C	
CFRM-0805FC55	13- 43	BN		E	
〃	18-901	BN		E	
CFRM-0808FC5D	11-901	BT		E	
CFRM-0808FC5F	11-901	BT		E	
CFRM-0812DS56	16-901	BC	N	E	
CFRM-0812DS57	16-901	BC	N	E	
CFS-T0098FC32	8- 11	AN		A	
CGERH0006QS01	9- 14	AK		C	
CGERH0113FC01	13- 60	AG		C	
CGERH1014FC01	5- 52	AG		C	
CGiDH1492DS51	15- 10	AQ		E	
CGiDM1493DS52	15- 1	AP		E	
CHLDZ0005QS51	26- 1	AV		E	
CHLDZ1184DS31	6- 87	BF		E	
〃	7-501	BF		E	
CHLDZ1187DS32	6- 84	BE		E	
〃	7-502	BE		E	
CHLDZ1202FC52	13- 48	BN		E	
〃	14-901	BN		E	
CLNS-0056FC32	6- 93	BE		E	
CPLTM0002QS01	26- 41	AM		C	
CPLTM4546FC01	9- 49	AH		C	
CPLTM4547FC01	12- 12	AP		C	
CPLTM4554FC01	18- 1	AF		C	
CPLTM4599FC01	6- 27	AE		C	
CPLTM4740FC01	9- 47	AD		C	
CPLTM4748FC01	9- 71	AV		C	
CPLTM4755FC01	5- 51	AF		C	
CPLTM4770DS01	6-111	AN		C	
CPWBF0001QSE1	5- 62	BP	N	E	
〃	20-901	BP	N	E	
CPWBF0001QSE2	5- 62	BP	N	E	
〃	20-901	BP	N	E	
CPWBF1052FCE2	4- 6	BB	N	E	
〃	21-901	BB	N	E	
CPWBF1053FCE2	13- 50	AW	N	E	
〃	22-901	AW	N	E	
CPWBF1053FCE7	13- 50	AW	N	E	
〃	22-901	AW	N	E	
CPWBF1055FCE1	13- 55	AZ	N	E	
〃	23-901	AZ	N	E	
CPWBF1056FCE1	5- 21	AX	N	E	
CPWBF1057DS51	5- 24	BA		E	
CPWBF1058DS31	6- 8	AS		E	
CPWBF1059FC51	51- 38	AS		E	
CPWBF1071FCE2	18- 37	AK	N	E	
CREFL0001QS31	6- 85	BN		E	
〃	8-901	BN		E	
CREFL0001QS32	6- 85	BP		E	
〃	8-901	BP		E	
CRŌLN1026FC33	13- 17	AX		E	
CRŌLP0921FC01	51- 17	AM		C	
CRŌLR1048FC31	51- 23	AV		E	
CRŌLR1052FC33	13- 38	AX		E	
CSHT-0061FC01	1- 13	AG		C	

PARTS CODE	NO.	PRICE RANK	NEW MARK	PART RANK	
CSLi-0057FC32	7- 6	AF		E	
〃	8- 8	AF		E	
CSPRB2177FC31	5- 13	BA		E	
CTME-0211FC01	26- 34	AK		C	
【D】					
DHAi-0002QSZZ	8- 22	AZ		C	
DHAi-0010QSZZ	5- 59	BY		C	
DHAi-0015QSZZ	13- 52	BC		C	
DHAi-0022QSZZ	16- 20	AK	N	C	
DHAi-0023QSZZ	6- 43	AK	N	C	
DHAi-0024QSZZ	5- 12	AZ	N	C	
DHAi-0025QSZZ	5- 12	AY	N	C	
DHAi-0026QSZZ	22- 1	AE		C	
DHAi-2296FCZZ	5- 57	AS		C	
DHAi-2298FC11	18- 12	AL		C	
DHAi-2305FCZZ	9- 10	AN		C	
DHAi-2309FCZZ	4- 8	AP		C	
〃	5- 64	AP		C	
DHAi-2313FCZZ	14- 11	AK		C	
DHAi-2316FCZZ	23- 1	AD		C	
DHAi-2329FCZZ	10- 31	AD		C	
DHAi-2378DS11	13- 63	AX		B	
DHAi-2399FCZZ	21- 19	AD		C	
DUNT-6733FCZZ	14- 12	AF		E	
DWiR-0466CSZZ	15- 3	BG		D	
【G】					
GCAB-0794FCZZ	1- 7	AQ		D	
GCAB-0795FCZZ	1- 2	AU		D	
GCAB-0796FCZZ	1- 5	AY		D	
GCAB-0797FCZ1	1- 6	AS		D	
GCAB-0797FCZZ	1- 6	AS		D	
GCAB-0799FCZ1	51- 43	AR		D	
GCAB-0800FCZZ	16- 21	AV		D	
GCASP0164FCZ2	19- 9	AZ		D	
GCŌVH0233FCGZ	2- 1	AM		D	
GCŌVH0234FCGZ	2- 2	AY		D	
GDAi-0164FCZ1	13- 45	BG		D	
GLEGG0058FCZZ	13- 88	AC		C	
【H】					
HiNDP0014QSZZ	4- 9	AX	N	D	
HiNDP0017QSZZ	4- 9	AX	N	D	
HiNDP0481FCZZ	19- 10	AG		D	
HiNDP0482FCZZ	19- 10	AG		D	
HPNLC0001QSZZ	4- 3	AU		D	
【J】					
JBTN-0186FCZZ	4- 4	AC		C	
【L】					
LBNDJ0013FCZ1	5- 79	AA		C	
〃	14- 20	AA		C	
〃	16- 17	AA		C	
〃	18- 36	AA		C	
〃	18- 48	AA		C	
〃	51- 51	AA		C	
LBNDJ0037FCZ1	8- 23	AA		C	
〃	13- 99	AA		C	
LBNDJ0043FCZ1	5- 69	AA		C	
〃	6- 80	AA		C	
LBŌSZ1031FCZZ	51- 10	AC		C	
LBRC-0057FCZZ	5- 33	AY		C	
LBSHC0310FCZZ	11- 32	AA		C	
LDAiU0001QSZZ	8- 25	AT		C	
LDAiU0483FCZZ	5- 26	AD		C	
LDAiU0484FCZZ	5- 8	AB		C	
LDAiU0485FCZZ	19- 7	AC		C	
LDAiU0487FCZZ	11- 19	AB		C	
LDAiU0488FCZZ	11- 17	AB		C	
LFiX-0001QSZZ	14- 17	AD		C	
LFiX-0084FCZZ	13- 73	AC		C	
LFiX-0284FCZZ	6- 12	AC		C	
〃	7- 10	AC		C	
〃	7- 21	AC		C	
LFiX-0467FCZZ	7- 2	AC		C	
LFRM-0001QSZZ	26- 20	AT		C	
LFRM-0800FCZZ	5- 7	AP		C	
LFRM-0805FCZ1	18- 13	AQ		C	
LFRM-0808FCZZ	11- 13	AP		C	
LFRM-0811FCZ1	51- 34	AQ		C	
LFRM-0812FCZZ	16- 11	AQ		C	
LHLDW1224FCZZ	6-101	AA		C	
LHLDW1240FCZZ	6-126	AC		C	
LHLDZ0001QSZZ	9- 30	AD		C	

PARTS CODE	NO.	PRICE RANK	NEW MARK	PART RANK	
LHLDZ0002QSZZ	26- 7	AL		C	
LHLDZ0003QSZZ	26- 9	AD		C	
LHLDZ0004QSZZ	26- 10	AH		C	
LHLDZ0006QSEZ	10- 8	AN	N	C	
LHLDZ1182FCZZ	6- 7	AE		C	
LHLDZ1187FCZZ	7- 29	AK		C	
LHLDZ1188FCZZ	7- 30	AF		C	
LHLDZ1189FCZZ	6- 97	AX		C	
LHLDZ1191FCZZ	11- 9	AC		C	
LHLDZ1192FCZZ	51- 3	AF		C	
LHLDZ1193FCZ1	51- 24	AD		C	
LHLDZ1195FCZZ	9- 26	AB		C	
LHLDZ1198FCZ2	5- 23	AL		C	
LHLDZ1201FCZZ	5- 3	AE		C	
LHLDZ1202FCZ1	14- 1	AP		C	
LHLDZ1203FCZZ	13- 49	AL		C	
LHLDZ1204FCZZ	18- 19	AG		C	
LHLDZ1205FCZ1	15- 7	AL		C	
LHLDZ1239FCZZ	6- 86	AE		C	
LPiNS0133FCZZ	13- 22	AA		C	
〃	16- 3	AA		C	
〃	18- 25	AA		C	
LPiNS0134FCZZ	18- 32	AB		C	
LPiNS0155FCZZ	13- 35	AA		C	
LPiNS0165FCZZ	51- 8	AB		C	
LPiNS0263FCZ1	12- 10	AA		C	
LPiNS0298FCZZ	26- 32	AA		C	
LPiNS1021HCZZ	6-124	AA		C	
LPLTM0006QSZZ	8- 1	AE		C	
LPLTM2642FCGZ	19- 12	AD		C	
LPLTM3773FCZ1	9- 44	AC		C	
LPLTM4542FCZZ	5- 18	AR		C	
LPLTM4549FCZZ	13- 44	AT		C	
LPLTM4555FCZZ	15- 2	AK		C	
LPLTM4562FCZZ	6- 56	AA		C	
LPLTM4563FCZZ	6- 57	AE		C	
LPLTM4576FCZZ	51- 26	AF		C	
LPLTM4578FCZZ	9- 7	AH		C	
LPLTM4581FCZZ	9- 6	AN		C	
LPLTM4714FCZZ	8- 10	AE		C	
LPLTM4715FCZ1	8- 17	AF		C	
LPLTM4716FCZ1	8- 14	AF		C	
LPLTM4739FCZZ	9- 48	AE		C	
LPLTM4746FCZZ	13- 24	AD		C	
LPLTM4747FCZZ	6- 70	AE		C	
LPLTM4749FCZZ	6-112	AF		C	
LPLTM4769FCZZ	16- 27	AK		C	
〃	51- 54	AK		C	
LPLTM5037FCZZ	10- 42	AD		C	
LPLTP0004QSZZ	8- 18	AG		C	
LPLTP0005QSZZ	8- 5	AG		C	
LPLTP4548FCZZ	5- 54	AF		C	
LPLTP4556FCZ1	19- 2	AK		C	
LPLTP4569FCZZ	7- 34	AE		C	
LPLTP4577FCZ1	16- 13	AC		C	
〃	51- 35	AC		C	
LPLTP4579FCZZ	9- 11	AD		C	
LPLTP4580FCZZ	9- 27	AC		C	
LPLTP5123FCZZ	10- 41	AK		C	
LPLTZ0003QSZ1	26- 8	AG		C	
LRALM0116FCZZ	6- 35	AE		C	
LSŌU-0129FCZ1	1- 4	AT		D	
〃	25- 4	AT		D	
LSŌU-0134FCZZ	51- 48	AM		D	
LSŌU-0135FCZZ	51- 50	AM		D	
LSŌU-0136FCZZ	51- 49	AK		D	
LSTPF0172FCZ1	11- 20	AA		C	
LSTPF0310FCZZ	10- 34	AC		C	
LSTPP0278FCZZ	51- 30	AC		C	
LSTPP0279FCZZ	6- 95	AB		C	
〃	13-100	AB		C	
LSUPP0061FCZZ	13- 57	AB		C	
LSUPP0080FCZZ	13- 56	AA		C	
LX-BZ0001QSZZ	25- 10	AD		C	
LX-BZ0049FCZZ	6- 47	AB		C	
LX-BZ0187FCZ1	5- 56	AA		C	
LX-BZ0324FCZZ	6- 46	AA		C	
LX-BZ0335FCZZ	6- 36	AA		C	
LX-BZ0342FCZZ	11- 22	AB		C	
LX-BZ0353FCZZ	6- 20	AA		C	
LX-BZ0358FCZ2	13- 2	AC		C	

PARTS CODE	NO.	PRICE RANK	NEW MARK	PART RANK	
LX-BZ0529FCZZ	9- 72	AA		C	
LX-BZ0586FCZZ	6- 17	AA		C	
LX-BZ0637FCZZ	6- 41	AC		C	
LX-BZ0707FCZZ	7- 5	AA		C	
LX-BZ0716FCZ2	25- 9	AD		C	
LX-BZ0718FCZZ	5- 32	AA		C	
LX-BZ0719FCZZ	5- 9	AA		C	
〃	6-123	AA		C	
LX-BZ0725FCZZ	7- 28	AB		C	
LX-BZ0727FCZZ	10- 12	AC		C	
LX-BZ0728FCZZ	5- 22	AA		C	
〃	16- 39	AA		C	
〃	51- 66	AA		C	
LX-BZ0733FCZZ	6- 24	AB		C	
LX-BZ0734FCZ1	10- 29	AC		C	
LX-BZ0735FCZZ	14- 6	AA		C	
LX-BZ0736FCZZ	5- 55	AB		C	
LX-BZ0747FCZZ	10- 33	AB		C	
LX-BZ0750FCZZ	1- 10	AB		C	
LX-BZ0754FCZZ	10- 35	AB		C	
LX-BZ3006SC0S	9- 59	AA		C	
LX-WZ0001QSZZ	26- 39	AC		C	
LX-WZ0017FCZZ	6-125	AA		C	
LX-WZ0042FCZ1	13- 26	AA		C	
LX-WZ0050FCZ1	6- 52	AA		C	
〃	7- 26	AA		C	
LX-WZ0052FCZ1	5- 67	AA		C	
LX-WZ0077FCZZ	7- 3	AA		C	
LX-WZ0186FCZZ	10- 36	AA		C	
LX-WZ0278FCZZ	9- 76	AA		C	
〃	18- 47	AA		C	
LX-WZ0285FCZZ	26- 33	AA		C	
LX-WZ0405FCZZ	10- 28	AB		C	
LX-WZ0407FCZZ	18- 40	AB		C	
LX-WZ0409FCZZ	5- 6	AB		C	
LX-WZ0414FCZZ	13- 79	AA		C	
LX-WZ0415FCZZ	16- 34	AA		C	
〃	51- 61	AA		C	
LX-WZ0416FCZZ	7- 14	AD		C	
【M】					
MARMP0180FCZ3	51- 16	AF		C	
MARMP0181FCZZ	51- 2	AC		C	
MARMP0182FCZZ	51- 29	AE		C	
MARMP0183FCZZ	13- 39	AE		C	
MARMP0184FCZZ	13- 29	AD		C	
〃	18- 4	AD		C	
MARMP0187FCZZ	18- 29	AC		C	
MCAMP0092FCZZ	6- 16	AD		C	
MLEVF0001QSZ1	13- 8	AG		C	
MLEVF0002QSZ1	13- 15	AG		C	
MLEVP0004QSZZ	26- 36	AE		C	
MLEVP0581FCZ1	1- 12	AD		C	
MLEVP0651FCZZ	16- 12	AD		C	
MLEVP0659FCZZ	18- 20	AC		C	
MLNKP0020FCZZ	51- 44	AD		C	
MLNKP0021FCZZ	51- 41	AD		C	
MSPRC0002QSZZ	26- 26	AD		C	
MSPRC0003QSZ1	26- 31	AB		C	
MSPRC0004QSZZ	26- 30	AC		C	
MSPRC0005QSZZ	26- 35	AB		C	
MSPRC0006QSZZ	26- 15	AB		C	
MSPRC0014QSZZ	5- 29	AB	N	C	
MSPRC1152FCZ1	51- 11	AF		C	
MSPRC1873FCZ1	19- 4	AB		C	
MSPRC2182FCZZ	5- 42	AB		C	
MSPRC2184FCZZ	5- 4	AA		C	
MSPRC2185FCZZ	5- 35	AA		C	
MSPRC2189FCZ1	13- 40	AC		C	
MSPRC2192FCZZ	14- 9	AB		C	
MSPRC2205FCZZ	15- 8	AA		C	
MSPRC2230FCZZ	13- 36	AA		C	
MSPRC2232FCZZ	14- 3	AB		C	
MSPRC2238FCZZ	5- 53	AA		C	
MSPRC2264FCZZ	13- 6	AC		C	
MSPRC2265FCZZ	6- 83	AB		C	
MSPRC2266FCZZ	13- 69	AB		C	
MSPRC2267FCZZ	13- 68	AA		C	
MSPRC2293FCZZ	18- 44	AA		C	
MSPRC2294FCZZ	13- 7	AA		C	
MSPRC2298FCZZ	9- 82	AB		C	
MSPRC2299FCZZ	9- 46	AB		C	

PARTS CODE	NO.	PRICE RANK	NEW MARK	PART RANK	
MSPRC2357FCZZ	18- 30	AE		C	
MSPRC2358FCZ1	18- 28	AC		C	
MSPRC2502FCZZ	51- 25	AB		C	
MSPRP0007QSZZ	8- 19	AF		C	
MSPRP0008QSZZ	8- 9	AH		C	
MSPRP0012QSZZ	5- 20	AF		C	
MSPRP1213FCZ1	13- 31	AA		C	
MSPRP1213FCZZ	13-104	AA		C	
MSPRP2101FCZZ	8- 13	AC		C	
MSPRP2263FCZZ	11- 30	AB		C	
MSPRT0001QSZZ	5- 94	AC		C	
〃	18- 6	AC		C	
MSPRT0513FCZ1	15- 4	AA		C	
MSPRT0925FCZ1	5- 63	AA		C	
MSPRT1324FCZ1	11- 4	AA		C	
MSPRT1565FCZ1	1- 14	AB		C	
MSPRT2209FCZZ	11- 7	AA		C	
MSPRT2210FCZZ	11- 16	AA		C	
MSPRT2220FCZZ	51- 1	AA		C	
MSPRT2271FCZZ	51- 18	AB		C	
MSPRT2272FCZZ	6- 88	AB		C	
MSPRT2290FCZZ	16- 36	AA		C	
〃	51- 63	AA		C	
【N】					
NBLTH0234FCZ1	13- 42	AL		B	
NBLTH0235FCZZ	18- 26	AF		B	
NBLTH0236FCZZ	13- 93	AK		B	
NBRGC0133FCZ1	6- 50	AC		C	
NBRGC0188FCZZ	13- 20	AB		B	
NBRGC0387FCZ1	6- 59	AC		B	
NBRGC0504FCZZ	13- 25	AC		C	
〃	18- 8	AC		C	
NBRGC0522FCZZ	9- 91	AC		C	
NBRGC0523FCZ1	10- 16	AE		C	
NBRGC0553FCZZ	12- 7	AD		C	
NBRGC0576FCZZ	9- 13	AF		C	
NBRGC0577FCZZ	9- 18	AG		C	
NBRGP0260FCZ1	13- 10	AD		B	
NBRGP0266FCZZ	16- 4	AA		B	
〃	51- 9	AA		B	
NBRGP0299FCZZ	10- 18	AC		C	
〃	26- 22	AC		C	
NBRGP0509FCZZ	5- 31	AF		C	
NBRGP0510FCZZ	13- 33	AC		C	
〃	18- 16	AC		C	
NBRGP0511FCZZ	13- 94	AB		C	
NBRGP0512FCZZ	13- 90	AC		C	
NGERH0001QSZZ	26- 17	AE		C	
NGERH0003QSZZ	26- 19	AD		C	
NGERH0004QSZZ	10- 21	AE		C	
NGERH0005QSZZ	9- 16	AD		C	
NGERH0143FCZZ	10- 15	AC		C	
NGERH0209FCZ1	18- 7	AB		C	
NGERH0236FCZZ	16- 10	AC		C	
NGERH0240FCZZ	10- 13	AB		C	
NGERH0394FCZZ	13- 58	AB		C	
NGERH0443FCZ1	11- 21	AD		C	
NGERH0491FCZZ	51- 13	AE		C	
NGERH0495FCZZ	51- 7	AC		C	
NGERH0866FCZZ	13- 23	AC		C	
NGERH0885FCZZ	16- 9	AC		C	
〃	18- 3	AC		C	
〃	51- 19	AC		C	
NGERH0892FCZZ	51- 15	AB		C	
NGERH0998FCZZ	6- 48	AE		C	
NGERH1000FCZZ	9- 15	AC		C	
NGERH1001FCZZ	9- 12	AC		C	
NGERH1002FCZZ	10- 11	AE		C	
NGERH1003FCZ1	10- 32	AD		C	
NGERH1003FCZZ	10- 23	AD		C	
NGERH1004FCZZ	10- 24	AC		C	
NGERH1005FCZZ	5- 49	AE		C	
NGERH1006FCZZ	5- 48	AD		C	
NGERH1007FCZZ	12- 3	AD		C	
NGERH1008FCZZ	12- 2	AD		C	
NGERH1009FCZZ	12- 1	AD		C	
NGERH1010FCZZ	12- 5	AD		C	
NGERH1011FCZZ	12- 9	AD		C	
NGERH1013FCZZ	5- 45	AC		C	
〃	12- 6	AC		C	
NGERH1015FCZZ	13- 28	AD		C	

PARTS CODE	NO.	PRICE RANK	NEW MARK	PART RANK	
NGERH1015FCZZ	18- 2	AD		C	
NGERH1017FCZZ	18- 9	AM		C	
NGERH1024FCZZ	10- 7	AE		C	
NGERH1026FCZZ	9- 67	AC		C	
NGERH1027FCZZ	13- 62	AC		C	
NGERH1028FCZZ	16- 2	AP		C	
NPLYZ0106FCZZ	18- 27	AC		C	
NPLYZ0254FCZZ	13- 34	AD		C	
NPLYZ0276FCZZ	7- 4	AG		C	
NPLYZ0291FCZZ	6- 15	AG		C	
NPLYZ0292FCZZ	6- 28	AH		C	
NPLYZ0295FCZ1	18- 15	AM		C	
NPLYZ0305FCZZ	6- 45	AP		C	
NPLYZ0340FCZZ	6- 23	AC		C	
〃	6- 29	AC		C	
NRŌLi1028FCZZ	13- 11	AZ		C	
NRŌLM1020FCZZ	9- 20	BB		C	
NRŌLP0001QSZZ	5- 95	AD		C	
NRŌLP0002QSZZ	9- 33	AR		C	
NRŌLP1024FCZZ	13- 91	AF		C	
NRŌLP1025FCZZ	13- 92	AF		C	
NRŌLP1036FCZZ	9- 32	AR		C	
NRŌLP1062FCZZ	16- 28	AB		C	
〃	51- 55	AB		C	
NRŌLR0003QSZZ	13- 32	AW		C	
NRŌLR0878FCZ1	18- 34	AN		C	
NRŌLR1018FCZZ	16- 5	AN		C	
NRŌLR1027FCZ1	13- 19	AN		C	
NRŌLR1030FCZ1	18- 17	AT		C	
NRŌLR1049FCZ1	18- 24	AU		C	
NRŌLR1096FCZZ	51- 6	AV		C	
NRŌLT1031FCZZ	11- 24	BC		C	
NSFTZ0001QSZZ	5- 30	AK		C	
NSFTZ2043FCZZ	10- 22	AD		C	
NSFTZ2044FCZZ	5- 5	AB		C	
NSFTZ2045FCZZ	5- 39	AM		C	
NSFTZ2050FCZ1	18- 22	AN		C	
NSFTZ2055FCZ1	6- 90	AK		C	
NSFTZ2056FCZ2	6- 49	AP		C	
NSFTZ2057FCZZ	6- 82	AE		C	
〃	6- 96	AE		C	
NSFTZ2062FCZ1	51- 14	AL		C	
NSFTZ2063FCZZ	51- 20	AD		C	
NSFTZ2065FCZZ	10- 10	AD		C	
NSFTZ2066FCZZ	10- 6	AB		C	
NSFTZ2074FCZZ	6- 14	AD		C	
NSFTZ2078FCZZ	13- 18	AF		C	
NSFTZ2135FCZ2	16- 29	AQ		C	
〃	51- 56	AQ		C	
NSFTZ2218FCZZ	18- 33	AL		C	
NSRW-0001QSZZ	26- 23	AK		C	
NSRW-0019FCZZ	9- 34	AP		C	
NSRW-0020FCZZ	9- 35	AP		C	
NSRW-0022FCZZ	10- 17	AE		C	
【P】					
PBŌX-0001QSZZ	10- 14	AK		D	
PBRSS0142FCZZ	11- 38	AE		B	
PBRSS0143FCZZ	11- 36	AE		B	
PBRSS0144FCZZ	11- 37	AE		B	
PBRSS0145FCZZ	11- 35	AF		B	
PCASZ0001QSZZ	26- 3	AL		C	
PCASZ0261FCZZ	15- 9	AH		C	
PCASZ0262FCZ1	9- 89	AG		D	
PCLC-0230FCZ1	12- 11	AZ		B	
PCLC-0231FCZZ	18- 11	AW		B	
PCLC-0235FCZ1	13- 27	AX		B	
PCLi-0007FCZZ	6-127	AB		C	
PCLR-0230FCZZ	18- 31	AD		C	
PCLR-0392FCZZ	7- 27	AB		C	
PCLR-0398FCZZ	16- 23	AB		C	
PCLR-0400FCZZ	11- 5	AC		C	
PCŌVP0003QSZZ	8- 20	AE		C	
PCŌVP0004QSZZ	8- 12	AE		C	
PCŌVP1226FCZ3	1- 11	AW		C	
PCŌVP1227FCZZ	1- 16	AE		C	
PCŌVP1232FCZZ	9- 38	AN		C	
PCŌVP1233FCZZ	9- 3	AK		C	
PCŌVP1234FCZ1	10- 2	AF		C	
PCŌVP1237FCZZ	19- 13	AF		C	
PCŌVP1268FCZZ	15- 13	AD		C	
PCŌVQ1231FCZ2	11- 3	AW		C	

PARTS CODE	NO.	PRICE RANK	NEW MARK	PART RANK	
PCUSF0003QSZZ	5-101	AB	N	C	
PCUSF0004QSZZ	18- 51	AB		C	
PCUSF0005QSZZ	18- 49	AD		C	
PCUSF0006QSZZ	18- 50	AC		C	
PCUSF0007QSZZ	26- 37	AB		C	
PCUSF0008QSZZ	26- 40	AA		C	
PCUSS0201FCZZ	7- 7	AA		C	
PCUSS0300FCZZ	19- 3	AB		C	
PCUSS0302FCZZ	13- 41	AA		C	
PCUSS0316FCZZ	18- 43	AA		C	
〃	19- 17	AA		C	
PCUSS0321FCZZ	6-115	AB		C	
PCUSS0322FCZZ	16- 40	AA		C	
〃	51- 67	AA		C	
PCUSU0203FCZZ	8- 21	AE		C	
PDUC-0002QSZZ	6- 4	AK		D	
PDUC-0086FCZ1	5- 11	AP		C	
PGiDH0002QSZZ	5- 27	AR		C	
PGiDH1488FCZZ	13- 21	AG		C	
PGiDH1497FCZZ	11- 18	AF		C	
PGiDH1498FCZZ	11- 15	AF		C	
PGiDH1540FCZZ	16- 22	AD		C	
PGiDM0001QSZZ	5- 28	AQ		C	
PGiDM0003QSZZ	26- 38	AG		C	
PGiDM0004QSZZ	6- 6	AG		C	
PGiDM0005QSZZ	6- 2	AG		C	
PGiDM1494FCZZ	6- 21	AE		C	
PGiDM1504FCZZ	51- 45	AF		C	
PGiDM1505FCZZ	51- 40	AF		C	
PGiDM1506FCZ1	51- 36	AC		C	
PGiDM1507FCZZ	16- 7	AD		C	
PGiDM1539FCZZ	7- 12	AC		C	
PGiDM1578FCZZ	18- 46	AD		C	
PGLSP0081FCZZ	1- 9	AY		B	
PGUMS0255FCZZ	6-117	AA		C	
PMiR-0001QSZZ	8- 4	AY		B	
PMiR-0116FCZZ	6- 40	AQ		B	
PMiR-0118FCZZ	7- 8	AR		B	
PMiR-0119FCZZ	7- 9	AV		B	
PMiR-0120FCZZ	7- 22	AT		B	
PMiR-0121FCZZ	7- 23	AQ		B	
PMLT-0002QSZZ	26- 25	AB		C	
PMLT-0003QSZZ	26- 16	AE		C	
PMLT-0938FCZZ	6- 37	AD		C	
PMLT-0959FCZZ	5- 80	AB		C	
PMLT-0960FCZZ	5- 81	AB		C	
PMLT-0961FCZZ	5- 82	AA		C	
PMLT-0962FCZZ	15- 15	AA		C	
PPiPP0002QSZZ	26- 24	AH		C	
PPiPP0108FCZZ	51- 12	AA		C	
PRDAF0044FCZZ	22- 2	AC		C	
PRDAF0062FCZZ	22- 3	AE		C	
PRDAF0063FCZZ	22- 4	AF		C	
PRDAR0060FCZZ	20- 1	AK		C	
PREFL0001QSZZ	8- 3	AZ		C	
PREFL0002QSZZ	8- 6	AK		C	
PREFL0153FCZZ	8- 26	AK		C	
PRNGP0005GCZZ	9- 31	AD		C	
PRNGP0022FCZZ	12- 8	AA		C	
PRNGP0023FCZZ	26- 18	AA		C	
PRNGP0025FCZZ	6- 22	AA		C	
〃	6- 30	AA		C	
〃	10- 25	AA		C	
PRNGP0050FCZZ	9- 19	AE		C	
PRNGP0081FCZZ	6-140	AA		C	
〃	16- 8	AA		C	
〃	18- 23	AA		C	
〃	51- 42	AA		C	
PSEL-0006QSZZ	26- 21	AG		C	
PSEL-0583FCZ1	9- 9	AA		C	
PSEL-0584FCZZ	9- 8	AA		C	
PSEL-0585FCZZ	9- 36	AB		C	
PSEL-0586FCZZ	9- 42	AA		C	
PSEL-0587FCZZ	9- 37	AA		C	
PSEL-0594FCZ1	10- 4	AC		C	
PSEL-0596FCZZ	10- 26	AA		C	
PSEL-0601FCZ1	9- 40	AD		C	
PSEL-0619FCZZ	9- 2	AB		C	
PSEL-0620FCZZ	9- 5	AA		C	
PSEL-0621FCZZ	9- 1	AA		C	
PSEL-0624FCZZ	9- 68	AB		C	

PARTS CODE	NO.	PRICE RANK	NEW MARK	PART RANK	
PSEL-0625FCZZ	9- 25	AB		C	
PSEL-0626FCZZ	9- 23	AB		C	
PSEL-0633FCZZ	9- 80	AA		C	
PSEL-0634FCZZ	9- 69	AC		C	
PSEL-0635FCZZ	9- 70	AC		C	
PSEL-0638FCZZ	9- 81	AB		C	
PSEL-0639FCZZ	9- 77	AB		C	
PSEL-0640FCZZ	9- 78	AA		C	
PSEL-0641FCZ2	5- 83	AE		C	
PSEL-0663FCZZ	9- 65	AE		C	
PSEL-0664FCZZ	9- 41	AC		C	
PSEL-0665FCZZ	9- 39	AD		C	
PSEL-0666FCZZ	9- 66	AD		C	
PSHEP0004QSZZ	26- 2	AF		C	
PSHEP0006QSZZ	26- 28	AC		C	
PSHEP0007QSZ1	5- 70	AE		C	
PSHEP0008QSZZ	5-100	AE		C	
PSHEP0010QSZZ	13-103	AE		C	
PSHEP3580FCZZ	13- 37	AD		C	
PSHEP3594FCZ1	6- 92	AD		C	
PSHEP3595FCZ1	6- 94	AD		C	
PSHEP3599FCZ1	51- 28	AC		C	
PSHEP3600FCZZ	9- 21	AC		C	
PSHEP3665FCZZ	13- 78	AB		C	
〃	23- 2	AB		C	
PSHEP3697FCZZ	5- 66	AG		C	
PSHEP3711FCZZ	6-119	AB		C	
PSHEP3713FCZZ	7- 13	AB		C	
PSHEP3715FCZZ	6- 98	AD		C	
PSHEP3724FCZZ	13- 75	AB		C	
PSHEP3725FCZZ	13- 76	AB		C	
PSHEP3727FCZZ	5- 74	AA		C	
PSHEP3728FCZZ	14- 16	AF		C	
PSHEP3743FCZ1	15- 12	AE		C	
PSHEP3757FCZZ	5- 78	AC		C	
PSHEP3760FCZZ	51- 64	AB		C	
PSHEP3761FCZZ	51- 57	AA		C	
PSHEP3762FCZZ	51- 58	AB		C	
PSHEP3764FCZZ	16- 33	AD		C	
〃	51- 60	AD		C	
PSHEP3765FCZZ	16- 41	AE		C	
PSHEP3772FCZZ	15- 14	AB		C	
PSHEP3778FCZ1	5- 84	AB		C	
PSHEP3788FCZZ	11- 39	AD		C	
PSHEP3807FCZZ	6-116	AB		C	
PSHEP3808FCZZ	5- 91	AD		C	
PSHEP3814FCZZ	7- 15	AB		C	
PSHEP3821FCZZ	16- 43	AC		C	
〃	51- 68	AC		C	
PSHEP3822FCZZ	16- 44	AC		C	
〃	51- 69	AC		C	
PSHEP3828FCZZ	6-131	AB		C	
PSHEP3861FCZZ	6-133	AF		C	
PSHEP4083FCZZ	6-143	AC		C	
PSHEZ2727FCZZ	22- 5	AC		C	
PSHEZ3258FCZZ	25- 15	AC		D	
PSHEZ3587FCZZ	6- 5	AG		C	
PSHEZ3589FCZZ	6- 68	AA		C	
PSHEZ3590FCZZ	6- 34	AA		C	
PSHEZ3591FCZZ	7- 32	AA		C	
PSHEZ3592FCZZ	7- 33	AB		C	
PSHEZ3655FCZ1	51- 27	AC		C	
PSHEZ3686FCZZ	8- 24	AH		C	
PSHEZ3699FCZZ	51- 52	AC		C	
PSHEZ3709FCZZ	6- 42	AB		C	
PSHEZ3714FCZZ	6- 99	AE		C	
PSHEZ3716FCZZ	13- 77	AK		C	
PSHEZ3726FCZZ	25- 11	AD		D	
PSHEZ3758FCZZ	18- 18	AC		C	
PSHEZ3771FCZZ	22- 43	AD		C	
PSHEZ3783FCZZ	13- 98	AD		C	
PSHEZ3786FCZZ	6-113	AA		C	
PSHEZ3809FCZZ	15- 16	AE		C	
PSHEZ4049FCZZ	7- 16	AC		C	
PSHEZ4077FCZZ	5- 93	AC		C	
PSHEZ4138FCZZ	2- 3	AV		D	
PSHT-0002QSZZ	26- 27	AE		C	
PSHT-0064FCZ2	10- 9	AF		C	
PSPAZ0001QSZZ	15- 17	AC		C	
PSPAZ0002QSZZ	15- 18	AC		C	
PSPAZ0666FCZZ	9- 85	AD		C	

PARTS CODE	NO.	PRICE RANK	NEW MARK	PART RANK	
PSRA-0001QSZZ	26- 29	AU		C	
PTME-0168FCZZ	11- 6	AF		C	
PTME-0233FCZZ	5- 37	AD		C	
PTME-0234FCZZ	5- 43	AD		C	
PTME-0235FCZZ	5- 34	AC		C	
PTME-0236FCZZ	5- 36	AC		C	
PTUBG0100FCZZ	11- 34	AC		C	
PWiR-0167FCZZ	6- 89	AP		C	
PWiR-0168FCZZ	6- 81	AQ		C	
【Q】					
QACCV6621QCN1	13- 63	AU		B	
QCNCM0594FCZZ	23- 3	AB		C	
QCNCM0597FCZZ	20- 2	AC		C	
QCNCM0598FCZZ	20- 3	AC		C	
QCNCM0611FCZZ	21- 1	AE		C	
QCNCM0672FCZZ	22- 6	AB		C	
QCNCM0876FCZZ	21- 2	AB		C	
QCNCM0878FCZZ	20- 4	AF		C	
QCNCM0923FC10	20- 5	AE		C	
QCNCM0923FC14	20- 6	AE		C	
QCNCM0923FC32	20- 7	AG		C	
QCNCM1069ACZZ	22- 7	AD		C	
QCNCM7014SC0C	20- 8	AA		C	
〃	23- 5	AA		C	
QCNCM7014SC0D	22- 8	AB		C	
QCNCM7014SC0E	20- 9	AB		C	
QCNCM7014SC0F	20- 10	AB		C	
QCNCM7014SC0G	23- 6	AB		C	
QCNCM7014SC0H	20- 11	AB		C	
QCNCM7014SC1J	23- 7	AC		C	
QCNCW0373FCZZ	20- 12	AC		C	
QCNCW0448FCZZ	22- 9	AB		C	
QCNCW0745FCZZ	23- 8	AB		C	
QCNCW0843FCZZ	22- 6	AC		C	
QEARP0066FCZZ	6-122	AC		C	
QEARP0075FCZZ	4- 11	AB		C	
QFS-B0030FCZZ	22- 10	AH		A	
QFS-C1500QCZZ	22- 10	AF		A	
QFS-D0331QCZZ	22- 11	AD		A	
QFS-D0430QCZZ	22- 12	AD		A	
QFS-D1325QCZZ	22- 13	AD		A	
QFS-D1326QCZZ	22- 11	AD		A	
QFS-D1330QCZZ	22- 13	AD		A	
QFS-D1422QCZZ	22- 12	AD		A	
QFSHA0025FCZZ	22- 14	AA		C	
QFSHD0001QCZZ	22- 15	AA		C	
QSLP-0169FCZ1	14- 14	AC		C	
QSLP-0169FCZZ	14- 8	AG		C	
QSLP-0170FCZZ	14- 5	AC		C	
QSLP-0171FCZZ	14- 4	AC		C	
QSLP-0173FCZZ	14- 7	AB		C	
QSLP-0174FCZZ	15- 6	AB		C	
QSLPA0001QSZZ	26- 4	AF		C	
QSLPA0002QSZZ	26- 6	AE		C	
QSLPA0003QSZZ	26- 5	AF		C	
QSŌCZ6408ACZZ	20- 13	AB		C	
QSW-C9170QCZZ	5- 16	AK		B	
QSW-M0296FCZZ	5- 17	AM		B	
QSW-P0465FCZZ	21- 3	AC		B	
QTANP0115FCZZ	22- 16	AB		C	
QTANP0116FCZZ	22- 17	AA		C	
〃	23- 9	AA		C	
QTANP0189FCZZ	22- 18	AC		C	
【R】					
RC-AZ0358FCZZ	20- 14	AE		C	
RC-KZ0287FCZZ	21- 4	AA		C	
RC-KZ472ANC3A	22- 19	AD		C	
RCiLF0048FCZZ	22- 21	AG		C	
RCRM-0001FCZZ	20- 15	AD		B	
RDTCF0001QSZZ	9- 22	AY		B	
RDTCT0002QSZZ	11- 12	AR		B	
RH-DZ0016FCZZ	20- 16	AB		B	
RLMPU0002QSZZ	8- 2	BE		B	
RLMPU0003QSZZ	8- 2	BF		B	
RLMPU0532FCZZ	11- 25	BC		B	
RLMPU0534FCZZ	11- 25	BC		B	
RMŌTD0003QSZZ	10- 20	AX		B	
RMŌTE0002QSZZ	6- 3	AY		B	
RMŌTE0006QSZZ	5- 15	AZ		B	
RMŌTP0001QSZZ	6- 58	AY		B	
RMŌTP0004QSZZ	12- 13	BY		B	

PARTS CODE	NO.	PRICE RANK	NEW MARK	PART RANK	
RMŌTP0005QSZZ	6- 55	AX		B	
RMPTA0031FCZZ	22- 22	AE		C	
RMPTC3102QCJB	21- 5	AA		B	
RPLU-0299FCZZ	51- 37	AV		B	
RPLU-0300FCZ1	51- 4	AQ		B	
RPLU-0301FCZZ	5- 50	AV		B	
RR-XA02R0SC2E	23- 10	AC		B	
RRLYD6122QCZZ	22- 23	AM		B	
RTHM-0009FCZZ	11- 27	AK		B	
RTRNP0003QSZZ	13- 54	BD		B	
RTRNP0005QSZZ	13- 54	BD		B	
RTRNZ0486FCZZ	23- 11	AN		B	
RTRNZ0487FCZ2	14- 10	BH		B	
RTRNZ0495FCZZ	23- 12	AP		B	
RVR-M151AQCZZ	23- 60	AF		B	
RVR-MD110QCZZ	23- 13	AE		B	
【S】					
SPAKA0017QSZZ	25- 6	AX		D	
SPAKA0018QSZZ	25- 2	AS		D	
SPAKA1624FCZZ	25- 14	AB		D	
SPAKC0013RS22	25- 7	AZ	N	D	
SSAKA2440QCZZ	25-103	AB		D	
【T】					
TCADZ1159FCZZ	25- 8	AA		D	
〃	25- 12	AA		D	
TCAUA0770FCZZ	1- 17	AB		C	
TCAUH0931FCZZ	11- 2	AB		C	
TiNSE0032QSZZ	25- 3	AP	N	D	
TiNSS0033QSZZ	25- 3	AP	N	D	
TLABH0013QSZZ	1- 20	AK		C	
TLABH0019QSZZ	2- 4	AE		C	
TLABZ3567FCZZ	19- 11	AE		C	
TLABZ3568FCZZ	19- 1	AB		C	
TLABZ3578FCZZ	16- 25	AF		C	
〃	51- 46	AF		C	
TLABZ3579FCZZ	16- 25	AF		C	
〃	51- 46	AF		C	
TLABZ3582FCZZ	10- 27	AB		C	
【U】					
UBAGF0039FCZZ	25- 1	AG		D	
UCLE-0004QSZZ	26- 14	AX		C	
UCLEZ0132FCZZ	9- 4	AF		C	
UCLEZ0134FCZZ	9- 79	AD		C	
【V】					
VCCCPU2HH390J	23- 14	AC		C	
VCCCTV1HH330J	20- 17	AA		C	
VCEAAL1HC682M	22- 24	AP		B	
VCEAGA1VW106M	20- 20	AA		C	
VCEAGU1AW476M	23- 15	AA		C	
VCEAGU1CW476M	20- 18	AB		C	
VCEAGU1EW475M	23- 16	AA		C	
VCEAGU1HW335M	23- 58	AA		C	
VCEAGU1HW474M	20- 19	AA		C	
VCEAGU1HW476M	23- 17	AB		C	
VCEAGU1HW477M	20- 22	AD		C	
VCEAGU1VW476M	20- 21	AB		C	
〃	23- 18	AB		C	
VCEAJU1CW476M	21- 6	AB		C	
VCEASU1EC222M	22- 25	AE		C	
VCFYEG2EA224M	22- 26	AE		C	
VCFYEG2EA474M	22- 27	AG		C	
VCKYPU1HB102K	21- 7	AA		C	
VCKYPU1HB221K	21- 8	AB		C	
VCKYPU1HB332K	23- 19	AA		C	
VCKYPU1HB391K	23- 20	AA		C	
VCKYPU1HB472K	23- 21	AA		C	
VCKYPU1HF223Z	23- 22	AA		C	
VCKYPU3AB102K	23- 23	AC		C	
VCKYPU3FB221K	23- 24	AB		C	
VCKYTV1HB102K	20- 23	AA		C	
VCKYTV1HB222K	20- 24	AA		C	
VCKYTV1HB223K	20- 25	AA		C	
VCKYTV1HB471K	20- 26	AA		C	
VCKYTV1HB473K	20- 27	AA		C	
VCQYNU1HM103K	20- 28	AA		C	
〃	23- 25	AA		C	
VCQYNU1HM104K	20- 29	AB		C	
〃	22- 28	AB		C	
VHDDAN202K/-1	20- 30	AB		B	
VHDDAP202K/-1	20- 31	AB		B	
VHDDSM1D1//-1	20- 32	AB		B	

PARTS CODE	NO.	PRICE RANK	NEW MARK	PART RANK	
VHDDSM1D1//-1	21- 9	AB		B	
〃	22- 29	AB		B	
VHDDSS131//-1	20- 33	AA		B	
〃	23- 26	AA		B	
VHDDSS133//-1	20- 34	AA		B	
〃	21- 10	AA		B	
〃	23- 27	AA		B	
VHDEU2A////-1	23- 28	AC		B	
VHDRBV608//-1	22- 30	AH		B	
VHDS1NB60//-1	22- 31	AD		B	
VHDS1ZB60//-1	22- 32	AC		B	
VHDSHV02///-1	23- 29	AD		B	
VHEHZ6A1///-1	23- 30	AB		B	
VHEHZ7A3///-1	23- 31	AB		B	
VHEHZS5B3//-V	20- 35	AB		B	
VHEHZS7A1//-1	20- 36	AB		B	
VHERD13EB1/-1	20- 37	AB		B	
VHi37702M6248	20- 47	BA		B	
VHiLC7935//-1	21- 11	AN		B	
VHiLM324NS/-S	20- 38	AC		B	
VHiLM339NS/-1	20- 39	AD		B	
VHiM51953BL-1	20- 40	AF		B	
VHiNJU3715L-1	23- 32	AM		B	
VHiSLA7024MT/	20- 41	AS		B	
VHiSN74LS07NS	20- 42	AF		B	
VHiTA7291S/-1	20- 43	AF		B	
VHiTA78057S-1	20- 44	AE		B	
VHiULN2003AN1	20- 45	AE		B	
〃	23- 33	AE		B	
VHiX24022//-1	20- 46	AL		B	
VHPGP1A22LC-1	6- 19	AK		B	
〃	16- 19	AK		B	
VHPGP3A100/-1	5- 19	AM		B	
VHPGP3A38//-1	6- 11	AH		B	
VHPLB-403MF1/	21- 12	AR		B	
VHPSLR322MC3F	21- 13	AC		B	
VHPSLR322VC3F	21- 14	AC		B	
VHRS11MD5V/-1	22- 33	AF		B	
VHRS21MD3V/-1	22- 33	AE		B	
VHSTM1641P-L1	22- 34	AP		B	
VHSTM1661P-L1	22- 34	AP		B	
VHSTM1661S-LF	22- 35	AK		B	
VRD-HT2EY101J	23- 59	AA		C	
VRD-HT2EY102J	21- 15	AA		C	
〃	23- 34	AA		C	
VRD-HT2EY103J	23- 35	AA		C	
VRD-HT2EY105J	22- 36	AA		C	
VRD-HT2EY113J	23- 36	AA		C	
VRD-HT2EY124J	23- 37	AA		C	
VRD-HT2EY151J	21- 16	AA		C	
VRD-HT2EY163J	23- 38	AA		C	
VRD-HT2EY183J	23- 39	AA		C	
VRD-HT2EY201J	21- 17	AA		C	
VRD-HT2EY202J	23- 40	AA		C	
VRD-HT2EY204J	23- 41	AA		C	
VRD-HT2EY223J	23- 42	AA		C	
VRD-HT2EY243J	22- 37	AA		C	
VRD-HT2EY433J	23- 43	AA		C	
VRD-HT2EY473J	23- 44	AA		C	
VRD-HT2EY474J	22- 36	AA		C	
VRD-HT2EY511J	23- 45	AA		C	
VRD-HT2EY512J	23- 46	AA		C	
VRD-HT2EY514J	23- 47	AA		C	
VRD-HT2EY622J	23- 48	AA		C	
VRD-HT2EY751J	23- 49	AA		C	
VRD-HT2EY752J	23- 50	AA		C	
VRD-HT2HY222J	20- 48	AA		C	
VRD-HT2HY305J	23- 51	AB		C	
VRD-HT2HY514J	23- 52	AA		C	
VRD-HT2HY823J	20- 49	AB		C	
VRHYKU3AD256K	23- 53	AG		C	
VRS-HT2HA101J	22- 38	AA		C	
VRS-HT2HA121J	22- 39	AA		C	
VRS-HT2HA201J	22- 39	AA		C	
VRS-HT3DA102J	20- 51	AA		C	
VRS-HT3DA1R0J	20- 50	AB		C	
VRS-TP2BD000J	20- 88	AA		C	
VRS-TS2AD101J	20- 52	AA		C	
VRS-TS2AD102F	20- 53	AA		C	
VRS-TS2AD102J	20- 54	AA		C	
VRS-TS2AD103F	20- 55	AA		C	

PARTS CODE	NO.	PRICE RANK	NEW MARK	PART RANK	
VRS-TS2AD103J	20- 56	AA		C	
VRS-TS2AD104J	20- 57	AA		C	
VRS-TS2AD105J	20- 58	AA		C	
VRS-TS2AD124F	20- 77	AB		C	
VRS-TS2AD153F	20- 59	AA		C	
VRS-TS2AD204F	20- 60	AA		C	
VRS-TS2AD222J	20- 61	AA		C	
VRS-TS2AD223J	20- 62	AA		C	
VRS-TS2AD242J	20- 63	AA		C	
VRS-TS2AD243F	20- 59	AB		C	
VRS-TS2AD302J	20- 64	AA		C	
VRS-TS2AD303F	20- 65	AA		C	
VRS-TS2AD334F	20- 66	AA		C	
VRS-TS2AD392J	20- 67	AA		C	
VRS-TS2AD432F	20- 68	AA		C	
VRS-TS2AD472J	20- 69	AA		C	
VRS-TS2AD473F	20- 70	AA		C	
VRS-TS2AD473J	20- 71	AA		C	
VRS-TS2AD562F	20- 72	AA		C	
VRS-TS2AD562J	20- 73	AA		C	
VRS-TS2AD621J	20- 74	AA		C	
VRS-TS2AD751J	20- 75	AA		C	
VRS-TS2AD822F	20- 76	AA		C	
VRS-TS2AD823F	20- 77	AA		C	
VS2SA1048Y/-1	23- 54	AB		B	
VS2SC2411K/-1	20- 82	AB		B	
VS2SC2458Y/-1	23- 55	AB		B	
VS2SC2752K/-1	23- 56	AE		B	
VS2SD1383KB-1	20- 83	AC		B	
VS2SD2045-/-1	20- 84	AH		B	
VS2SD2374A/-1	23- 57	AE		B	
VSDTA114YK/-1	20- 78	AC		B	
VSDTB113ZS/-1	21- 18	AC		B	
VSDTC114YK/-1	20- 79	AC		B	
VSDTC115EK146	20- 80	AC		B	
VSDTC124GK146	20- 81	AC		B	
【X】					
XBBSD30P06000	9- 64	AA		C	
〃	20- 85	AA		C	
XBBSD30P08000	10- 3	AA		C	
XBBSD40P06000	6- 25	AA		C	
〃	9- 56	AA		C	
XBBSD40P10000	6- 10	AA		C	
XBBSE30P08000	5- 77	AA		C	
XBPBN30P05000	8- 29	AB		C	
XBPBZ40P06K00	6-106	AA		C	
〃	13- 51	AA		C	
XBPS230P10000	26- 42	AA		C	
XBPSD20P12000	10- 39	AA		C	
XBPSD30P04K00	6- 13	AA		C	
〃	7- 1	AA		C	
XBPSD30P06000	14- 15	AA		C	
XBPSD30P06K00	6-120	AA		C	
〃	14- 13	AA		C	
〃	20- 86	AA		C	
XBPSD30P06KS0	6- 18	AA		C	
XBPSD30P08K00	14- 18	AA		C	
〃	20- 87	AA		C	
〃	22- 40	AA		C	
XBPSD30P08KS0	5- 97	AA		C	
〃	9- 60	AA		C	
XBPSD30P10K00	22- 41	AA		C	
XBPSD30P10KS0	5- 38	AB		C	
XBPSD30P14000	14- 2	AA		C	
XBPSD40P06000	7- 31	AA		C	
〃	7- 35	AA		C	
XBPSD40P06K00	6- 26	AA		C	
XBPSD40P08KS0	13- 72	AA		C	
XBPSD40P10K00	13- 59	AA		C	
XBPSD40P10KS0	5- 60	AA		C	
XBPSD40P14K00	12- 14	AA		C	
XBPSD40P25XS0	13- 71	AA		C	
XBPSE30P06000	13- 64	AA		C	
XEBS230P08000	9- 74	AA		C	
XEBS230P12000	9- 57	AA		C	
XEBSD30P06000	8- 30	AA		C	
〃	15- 5	AA		C	
〃	18- 21	AA		C	
XEBSD30P08000	1- 15	AA		C	
〃	5- 89	AA		C	
〃	9- 58	AA		C	

PARTS CODE	NO.	PRICE RANK	NEW MARK	PART RANK	
XEBSD30P08000	10- 19	AA		C	
〃	11- 14	AA		C	
〃	16- 42	AA		C	
〃	26- 13	AA		C	
〃	51- 22	AA		C	
XEBSD30P10000	5- 58	AA		C	
〃	5- 68	AA		C	
〃	9- 90	AA		C	
〃	16- 6	AA		C	
〃	51- 39	AA		C	
XEBSD30P12000	26- 11	AA		C	
XEBSD40P10000	26- 12	AA		C	
XEBSD40P16000	16- 18	AA		C	
XEBSE30P06000	51- 47	AA		C	
XEBSE30P08000	19- 14	AA		C	
XEBSE40P06000	19- 16	AA		C	
XEBSE40P08000	6-105	AA		C	
XEBSE40P10000	5- 1	AA		C	
XEBSE40P12000	13- 3	AA		C	
〃	18- 10	AA		C	
〃	19- 8	AA		C	
XEPSD30P06000	4- 7	AA		C	
〃	6- 9	AA		C	
〃	15- 11	AA		C	
XEPSD30P08000	4- 12	AA		C	
XEPSD30P12000	10- 30	AA		C	
XEPSD30P20000	13- 46	AA		C	
〃	18- 41	AA		C	
XEPSD40P10000	16- 24	AA		C	
XEPSD40P12000	18- 39	AA		C	
XEPSD40P35000	6-103	AA		C	
XHBS230P10000	5- 75	AA		C	
〃	26- 43	AA		C	
XHBSD30P04000	11- 26	AA		C	
XHBSD30P06000	7- 11	AA		C	
〃	8- 31	AA		C	
〃	11- 1	AA		C	
XHBSD30P08000	8- 28	AA		C	
XHBSD30P10000	11- 11	AA		C	
XHBSD40P12000	13- 80	AA		C	
XHBSE30P06000	5- 25	AA		C	
〃	16- 38	AA		C	
〃	51- 65	AA		C	
XHBSE30P30000	5- 14	AA		C	
XHBSE40P06000	13- 14	AA		C	
XHBSE40P08000	1- 19	AA		C	
〃	5- 72	AA		C	
XHBSE40P10000	1- 3	AA		C	
〃	5- 2	AA		C	
〃	13- 1	AA		C	
XHPSD30P06000	8- 27	AA		C	
XJPSD30P05000	8- 7	AA		C	
XNESD20−16000	10- 38	AA		C	
XNESD30−24000	22- 42	AA		C	
XNESD40−32000	7- 24	AA		C	
XNESD50−40000	13- 67	AA		C	
XNESF40−32000	6- 54	AA		C	
XRESP30−06000	9- 45	AA		C	
〃	16- 26	AA		C	
XRESP40−05000	13- 30	AA		C	
〃	16- 1	AA		C	
〃	18- 35	AA		C	
〃	51- 5	AA		C	
XRESP40−06000	5- 96	AA		C	
〃	9- 53	AA		C	
〃	10- 5	AA		C	
XRESP50−06000	5- 47	AA		C	
〃	6- 60	AA		C	
〃	9- 52	AA		C	
〃	13- 9	AA		C	
〃	18- 5	AA		C	
XRESP70−08000	5- 46	AA		C	
〃	6- 44	AA		C	
〃	12- 4	AA		C	
〃	13- 70	AA		C	
〃	18- 14	AA		C	
XUBUZ30P08000	9- 54	AA		C	
XWHSD30−05070	9- 73	AA		C	
〃	14- 19	AA		C	
XWHSD30−05080	9- 61	AA		C	
〃	11- 10	AA		C	

PARTS CODE	NO.	PRICE RANK	NEW MARK	PART RANK	
XWHSD30−10080	18- 38	AA		C	
XWHSD40−08000	6- 53	AA		C	
〃	7- 25	AA		C	
XWHSD40−08100	9- 50	AA		C	
XWHSD50−05120	10- 37	AA		C	